87045 LIMOGES Cedex
Telephone number: +33 (0)5 55 06 87 87 – Fax: +33 (0)5 55 06 88 88

DX³ 4-pole RCBO 6000 A/10 kA

Cat. N°(s) : 4 111 85, 86, 87, 88, 89 / 4 112 04, 05, 06, 07, 4 112 08, 23, 24, 25, 26, 27, 28, 29, 30, 31, 32, 33, 34, 35, 4 112 36, 37, 38, 39, 40, 41, 42, 44, 45, 46, 47, 49, 50, 51, 4 112 52 / 4 113 50, 56, 57, 59, 60, 61, 62, 80, 81



CONTENTS PAGE

1. Description, use 1
2. Range 1
3. Overall dimensions 1
4. Preparation - Connection 1
5. General characteristics 3
6. Compliance and approvals 15
7. Curves 16
8. Auxiliaries and accessories 25
9. Safety 25

1. DESCRIPTION - USE

Residual Current Operated Circuit Breaker (RCBO) with positive contact indication for control, protection against short circuits and overload and isolation of electrical circuits, protecting people from direct and indirect contact and protecting installations from insulation faults.

Symbol:

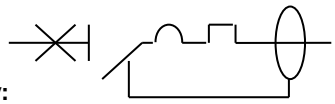

Technology:
. Limiting device
. Simultaneous control of all poles for closing and opening (trip-free mechanism)

2. RANGE

Polarity:
- 4 protected poles

Width:
. 4 modules (4 x 17.8 mm = 71,2 mm)

Rated currents In:
10 / 13 / 16 / 20/ 25/ 32 A

Magnetic tripping curve:
. C (between 5 and 10 In)
. B (between 3 and 5 In)

Type:
. AC (sinusoidal differential alternating current)
. A (residual current with a DC component)
. F (immunised against false tripping). F products are also A type.

Sensitivity – Operating time:
. 30 mA - instantaneous
. 300 mA - instantaneous
. 1 000 mA - instantaneous

2. RANGE *(continued)*

Rated voltage and frequency:
. 230/400 V~, 50 Hz with standard tolerances
. 240/415 V~, 50 Hz with standard tolerances

Maximum operating voltage:
. 440 V~, 50 Hz with standard tolerances

Breaking capacity:
. Icn = 6000 A in accordance with standard EN/IEC 61009-1
. Icu = 10 kA in accordance with standard EN/IEC 60947-2

3. OVERALL DIMENSIONS:

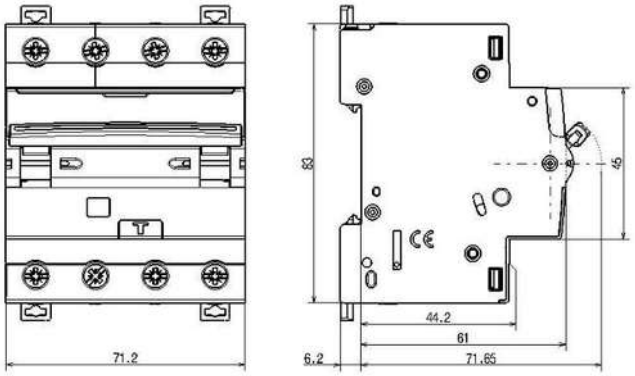

4. PREPARATION - CONNECTION

Mounting:
. On symmetrical EN 60.715 rail or DIN 35 rail

Operating positions:
. Vertical horizontal upside down On the side

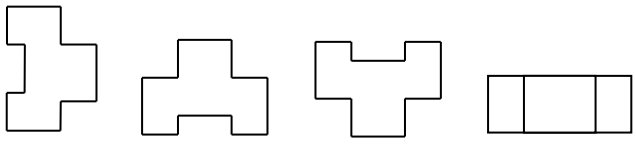

Power supply:
. Either from the top or the bottom

4. PREPARATION - CONNECTION *(continued)*

400V three-phase network wiring without neutral:
connect the 3 phases as indicated by the arrows in below diagram

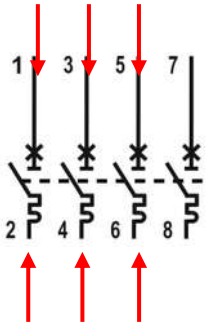

OR

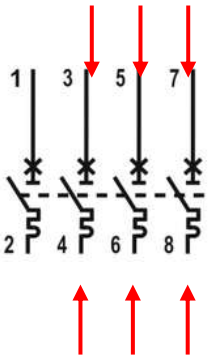

Module maintenance :
. A RCBO may be replaced in the middle of a row supplied with busbars without disconnecting the other products

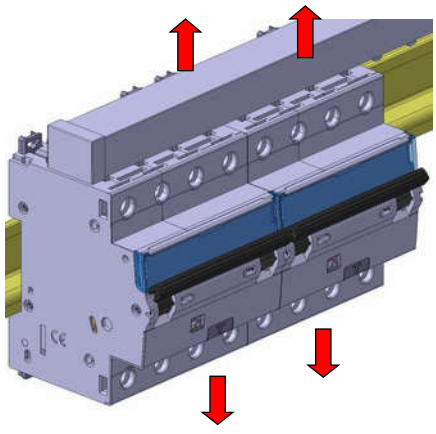

Put the clamp in the unlocking position

Unscrew the four upper terminals completely

Pull the device forward in order to release it from the rail

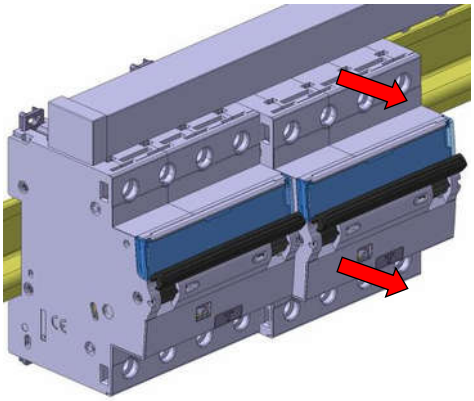

Pull the device downward in order to release it completely from the prongs of the busbar

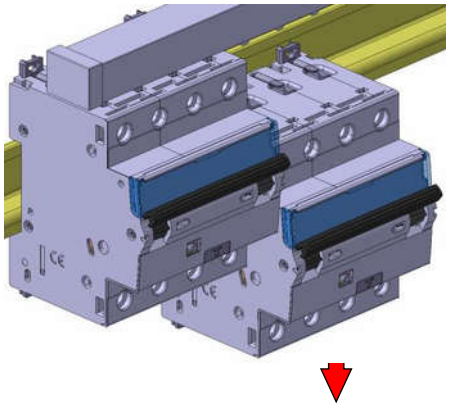

Connection:
. Terminals protected against direct contact IP20, when device wired
. Cage terminals, with release and captive screws
. Terminals fitted with shutters preventing a cable being placed under the terminal, with the terminal partly open or closed
. Alignment and spacing of the terminals permitting connection with the other products via prong and fork-type (biconnect) supply busbars
. Terminal depth: 13 mm upstream and 13 mm downstream
. Screw head: mixed, slotted and Pozidriv no. 2
. Tightening torque:
- Recommended: 2.5 Nm
- Min.: 1.2 Nm
- Max.: 3.5 Nm

4. PREPARATION - CONNECTION *(continued)*

Conductor type:
. Copper cable
. Cable cross-section:

	Without ferrule	With ferrule
Rigid cable	**1 x 0.75 mm² to 35 mm²** **2 x 0.75 mm² to 16 mm²**	**-**
Flexible cable	**1 x 0.75 mm² to 25 mm²** **2 x 0.75 mm² to 16 mm²**	**1 x 0.75 mm² to 25 mm²**

. Prong supply busbar at the top or the bottom of the product, alone or with a 16 mm² flexible wire (without ferrule) or a connection terminal in the same terminal.
. Fork supply busbar at the bottom of the product

Recommended tools:
. For the screw terminals, screwdriver with 5.5 mm to 6.5 mm blade or Pozidriv no. 2 screwdriver
. For attaching or removing the DIN rail, screwdriver with 5.5 mm to 6.5 mm blade or Pozidriv no. 2 screwdriver

Manual actuation of the RCBO
. Ergonomic 2-position handle:
-"O-OFF": Device open
-"I-ON": Device closed

Contact status display:
. By marking of the handle:
-"O-OFF" in white on a green background = contacts open
-"I-ON" in white on a red background = contacts closed

Trip indication on residual current fault:
. Yellow indicator on the front

Locking:
. Padlocks possible in the open or closed positions with padlock support (Cat. No. 4 063 03) and Ø 5 mm padlock (Cat. No. 4 063 13) or Ø6 mm padlock (Cat. No. 227 97)

Sealing:
. Possible in the open or closed positions

Labelling:
. Circuit identification by way of a label inserted in the label holder situated on the front of the product

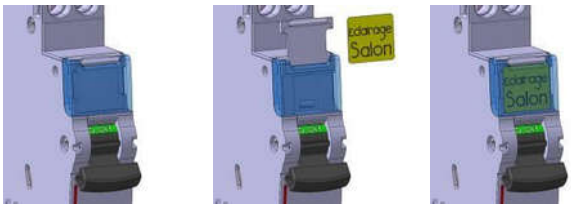

5. GENERAL CHARACTERISTICS

Neutral earthing system:
. IT , TT, TN

Marking on the front side:
. By permanent ink pad printing

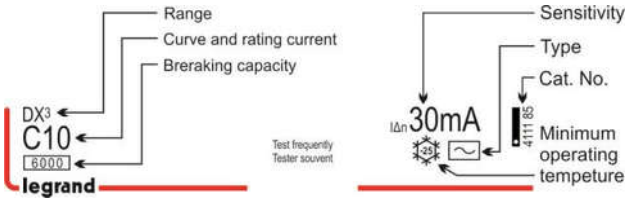

Marking on the upper panel:
. By permanent ink pad printing

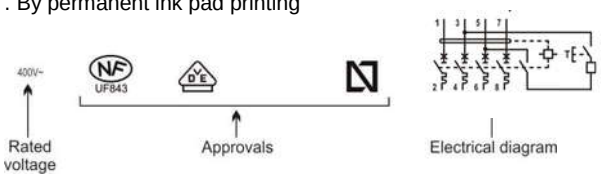

Test operating voltages:

IΔn	30 mA	300 mA	1000 mA
min. U	**320 V~**	**220 V~**	**230 V~**
max. U	**440 V~**	**440 V~**	**440 V~**

Breaking capacity:
. With a three-phase network + neutral (with alternating current 50 Hz)

Standard	Voltage between poles	Breaking capacity	
EN 61009-1	230 V	Icn	**6 kA**
	400 V		**6 kA**
EN 60947-2	230 V	Icu	**10 kA**
	400 V		**10 kA**
	230 V	Ics	**50 % Icu**
	400 V		**50 % Icu**

Residual breaking capacity:
. IΔm = 4.5 kA in accordance with EN 61009-1 section 9.12.11.4d (IΔm: short-circuit to earth)

Breaking capacity on one single pole (phase pole):
. In accordance with I_{IT} EN60947-2 – Appendix H (double fault in IT system): 3 kA at 400 V ~ and 6 kA at 230 V~
. In accordance with Icn1 EN60898-1: 10 kA at 230 V~

5. GENERAL CHARACTERISTICS *(continued)*

Isolation distance:
. The distance between the contacts is greater than 5.5 mm with the handle in the open position. The RCBO is suitable for isolation in accordance with standard EN/IEC 61009-1

Insulation voltage:
. Ui = 500 V in accordance with standard EN/IEC 61009-1

Degree of pollution:
. 2 in accordance with standard EN/IEC 61009-1

Dielectric strength:
. 3,500 V

Rated impulse withstand voltage:
. Uimp = 4 kV (wave 1.2/50 µs)

Protection from false tripping:
. 8/20 µs wave resistance: 250 A
. 0.5 µs/100 kHz damped recurring wave resistance: 200 A

Degree or class of protection:
. Terminals protected against direct contact, Class of protection against solid objects and liquids (wired device): IP20 in accordance with standards IEC 529 – EN 60529 and NF 20-010
. Front panel protected against direct contact: IP 40
. Class II in relation to metallic conductive parts
. Class of protection against mechanical impacts IK 02 in accordance with standard EN 62262.

Plastic materials:
. Polyamide and P.B.T.

Enclosure heat and fire resistance:
. Resistance to glow wire tests at 960°C, in accordance with standard IEC/EN 61009-1
. Classification V0, in accordance with standard UL94

Higher heating potential:
. The heat potential of a 30 mA AC type C16 device is estimated at: 4.73 MJ

Closing and opening force via the handle:
. 6 N on opening
. 20 N on closing

Mechanical endurance:
Compliant with standard EN/IEC 61009-1
. Tested with 20,000 operations with no load

Electrical endurance:
Compliant with standard EN/IEC 61009-1
. Tested with 10,000 operations with load (at In x Cos φ 0.9)
. Tested with 2,000 residual current trip operations using the Test button or the fault current

Sinusoidal vibration resistance (in accordance with IEC 60068.2.6):
. Axes: x - y - z
. Frequency: 10 to 55 Hz
. Acceleration: 3g (1g = 9.81 $m.s^{-2}$)

Resistance to tremors:
. In accordance with standard EN/IEC 61009-1

Ambient temperatures:
. Operation: from – 25°C to + 60°C
. Storage: from – 40°C to + 70°C

DC operation:
. Cannot be used with DC

Frequency:
. Operation at at 400 Hz: No
. Operation at 60 Hz: Yes., except sensitivities 30mA, A and AC types, which can be replaced, only for ratings 16A,20A,25A,32A, by F types of equivalent ratings and sensitivity.

Packaged volume:

	Volume (dm^3)	Packaging
For all ratings	**0.7**	**Per 1**

Average weight per device:
. 30mA RCBOs= 0,48 kg
. 300mA RCBOs= 0,45 kg
. 1 A RCBOs= 0,45 kg

Derating of RCBOs function of the number of devices placed side by side:
When several RCBOs are installed side by side and operate simultaneously, the heat dissipation of one pole is limited. This results in an increased operating temperature for the RCBOs causing false tripping. Applying the following additional coefficients to the operating currents is recommended.

Number of RCBOs side by side	Coefficient
2 - 3	**0.9**
4 - 5	**0.8**
6 - 9	**0.7**
≥ 10	**0.6**

These values are provided by recommendation IEC 60439-1 and the standards NF C 63421 and EN 60439-1.
In order to avoid having to use these coefficients there must be good ventilation and the devices must be kept apart using the spacing elements Cat. No. 4 063 07 (0.5 module).

Specific use: Appropriate to operate in humid atmosphere and polluted by a chlorined environment (pool-type)

5. GENERAL CHARACTERISTICS *(continued)*

Derating of RCBOs in the event of use with fluorescent tubes:
Electronic or ferromagnetic ballasts provide a high inrush current for a very short time. These currents are liable to cause tripping of the RCBOs .
The maximum number of ballasts per RCBOs stated by the lamp and ballast manufacturers in their catalogues should be taken into account during installation.

Impact of height:

	≤2,000 m	3,000 m	4,000 m	5,000 m
Dielectric strength	**3,500 V**	**2,500 V**	**2,000 V**	**1,500 V**
Maximum operating voltage	**400 V**	**400 V**	**400 V**	**400 V**
Derating at 30°C	**none**	**none**	**none**	**none**

Dissipated power (per device):
. B and C curve RCBOs, all types and all sensitivities

Rated current	10 A	13 A	16 A	20 A	25 A	32 A
Power (W)	**4.7**	**5.7**	**8.9**	**9.3**	**10.4**	**12.3**

Derating of RCBOs depending on the ambient temperature:
. The nominal characteristics of a RCBO are modified depending on the ambient temperature which prevails in the cabinet or enclosure where the RCBO is located.
. Reference temperature: 30°C in accordance with standard IEC/EN 60947-2.

	Ambient Temperature/In								
In (A)	- 25°C	- 10°C	0°C	10°C	20°C	30°C	40°C	50°C	60°C
10	**13**	**12**	**12**	**11**	**11**	10	**10**	**10**	**10**
13	**17**	**16**	**15**	**14**	**14**	13	**13**	**13**	**13**
16	**20**	**19**	**18**	**18**	**18**	16	**16**	**16**	**16**
20	**26**	**24**	**23**	**22**	**21**	20	**20**	**20**	**20**
25	**32**	**30**	**29**	**28**	**26**	25	**25**	**25**	**25**
32	**41**	**38**	**37**	**35**	**34**	32	**32**	**32**	**32**

Association and coordination with upstream fuses:
. Three-phase network (+N) 400/415 V, in accordance with standard IEC 60947-2
. TT neutral earthing or TNS system

		Upstream fuse									
		gG and aM types									
Downstream RCBO		≤20 A	25 A	32 A	40 A	50 A	63 A	80 A	100 A	125 A	160 A
DX³ 6000 A B and C curves	≤13 A	**100 kA**	**100 kA**	**100 kA**	**100 KA**	**100 KA**	**100 kA**	**100 kA**	**100 kA**	**100 kA**	**40 kA**
	16 A	**-**	**100 kA**	**100 kA**	**100 kA**	**100 kA**	**100 kA**	**100 kA**	**100 kA**	**100 kA**	**40 kA**
	20 A	**-**	**-**	**100 kA**	**100 kA**	**100 kA**	**100 kA**	**100 kA**	**100 kA**	**100 kA**	**40 kA**
	25 A	**-**	**-**	**-**	**100 kA**	**100 kA**	**100 kA**	**100 kA**	**100 kA**	**100 kA**	**40 kA**
	32 A	**-**	**-**	**-**	**-**	**100 kA**	**100 kA**	**100 kA**	**100 kA**	**100 kA**	**40 kA**

5. GENERAL CHARACTERISTICS (continued)

Association and coordination with upstream MCBs:
. Three-phase network (+N) 400/415 V, in accordance with standard IEC 60947-2
. TT neutral earthing or TNS system

		Upstream MCB			
		DX³ 10 kA B and C curves DX³ 6000/10 kA B, C and D curves			
Downstream RCBO		≤32 A	40 A	50 A	63 A
DX³ 6000 A B and C curves	≤25 A	**10 kA**	**10 kA**	**10 kA**	**10 kA**
	32 A	**-**	**10 kA**	**10 kA**	**10 kA**

		Upstream MCB											
		DX³ 10000 16 kA B/C/D curves			DX³ 25 kA B/C/D curves			DX³ 36 kA C curve			DX³ 50 kA B/C/D curves		
Downstream RCBO		≤15 A	32 A	40 to 125 A	≤25 A	32 A	40 to 125 A	≤25 A	32 A	40 to 80 A	≤25 A	32 A	40 to 63
DX³ 6000 A B and C curves	≤20 A	**16 kA**	**16 kA**	**16 kA**	**25 kA**	**25 kA**	**25 kA**	**36 kA**	**36 kA**	**36 kA**	**50 kA**	**50 kA**	**50 kA**
	25 A	**-**	**16 kA**	**16 kA**	**-**	**25 kA**	**25 kA**	**-**	**36 kA**	**36 kA**	**-**	**50 kA**	**50 kA**
	32 A	**-**	**-**	**16 kA**	**-**	**-**	**25 kA**	**-**	**-**	**36 kA**	**-**	**-**	**50 kA**

Association and coordination with upstream Moulded Case Circuit Breakers (MCCBs):
. Three-phase network (+N) 400/415 V, in accordance with standard IEC 60947-2
.TT neutral earthing or TNS system

		Upstream MCCBs											
		DPX³ 160 16 kA			DPX³ 160 25 kA			DPX³ 160 36 kA			DPX³ 160 50 kA		
Downstream RCBO		16 A	25 A	40 to 160 A	16 A	25 A	40 to 160 A	16 A	25 A	40 to 160 A	16 A	25 A	40 to 160 A
DX³ 6000 A B and C curves	≤13 A	**16 kA**	**16 kA**	**16 kA**	**25 kA**	**25 kA**	**25 kA**	**25 kA**	**25 kA**	**25 kA**	**25 kA**	**25 kA**	**25 kA**
	16 A	**-**	**16 kA**	**16 kA**	**-**	**25 kA**	**25 kA**	**-**	**25 kA**	**25 kA**	**-**	**25 kA**	**25 kA**
	20 A	**-**	**16 kA**	**16 kA**	**-**	**25 kA**	**25 kA**	**-**	**25 kA**	**25 kA**	**-**	**25 kA**	**25 kA**
	25 A	**-**	**-**	**16 kA**	**-**	**-**	**25 kA**	**-**	**-**	**25 kA**	**-**	**-**	**25 kA**
	32 A	**-**	**-**	**16 KA**	**-**	**-**	**25 kA**	**-**	**-**	**25 kA**	**-**	**-**	**25 kA**

5. GENERAL CHARACTERISTICS *(continued)*

Association and coordination with upstream Moulded Case Circuit Breakers (MCCBs):
. Three-phase network (+N) 400/415 V, in accordance with standard IEC 60947-2
.TT neutral earthing or TNS system

		Upstream MCCB			
		DPX³ 250 25 kA	DPX³ 250 36 kA	DPX³ 250 50 kA	DPX³ 250 70 kA
Downstream RCBO		25 to 250 A	25 to 250 A	25 to 250 A	25 to 250 A
DX³ 6000 A B and C curves	≤32 A	**25 kA**	**25 kA**	**25 kA**	**25 kA**

		Upstream MCCB				
		DPX 250 36 kA DPX-H 250 70KA		DPX / DPX-H 630	DPX / DPX-H 1250	DPX / DPX-H 1600
Downstream RCBO		25 A	40 to 250 A	250 to 630 A	500 to 1,250 A	630 to 1600 A
DX³ 6000 A B and C curves	≤20 A	**25 kA**	**25 kA**	**25 kA**	**25 kA**	**25 KA**
	25 A	**-**	**25 kA**	**25 kA**	**20 kA**	**20 kA**
	32 A	**-**	**25 kA**	**25 kA**	**15 kA**	**15 kA**

		Upstream MCCB	
Downstream RCBO		DPX 250 ER AB	DPX 400 AB
DX³ 6000 A B and C curves	≤32 A	**25 kA**	**25 kA**

Association and coordination with upstream fuses only for sensitivities 300mA and 1000mA :
. Three-phase network (+N) 230/240, in accordance with standard IEC 60947-2
. TT neutral earthing or TNS system

		Upstream fuse									
		gG and aM types									
Downstream RCBO		≤20 A	25 A	32 A	40 A	50 A	63 A	80 A	100 A	125 A	160 A
DX³ 6000 A B and C curves	≤13 A	**100 kA**	**100 kA**	**100 kA**	**100 kA**	**100 KA**	**100 kA**	**100 kA**	**100 kA**	**100 kA**	**40 KA**
	16 A	**-**	**100 kA**	**100 kA**	**100 kA**	**100 kA**	**100 kA**	**100 kA**	**100 kA**	**100 kA**	**40 kA**
	20 A	**-**	**-**	**100 kA**	**100 kA**	**100 KA**	**100 kA**	**100 kA**	**100 kA**	**100 kA**	**40 kA**
	25 A	**-**	**-**	**-**	**100 kA**	**100 kA**	**100 kA**	**100 kA**	**100 kA**	**100 kA**	**40 kA**
	32 A	**-**	**-**	**-**	**-**	**100 kA**	**100 kA**	**100 kA**	**100 kA**	**100 kA**	**40 kA**

5. GENERAL CHARACTERISTICS *(continued)*

Association and coordination with upstream MCBs, only for sensitivities 300mA and 1000mA :
. Three-phase network (+N) 230/240 V, in accordance with standard IEC 60947-2
. TT neutral earthing or TNS system

		Upstream MCB			
		DX³ 6000/10 kA B, C and D curves			
Downstream RCBO		≤32A	40A	50A	63A
DX³ 6000 A B and C curves	≤ 25 A	**25 kA**	**25 kA**	**25 kA**	**25 kA**
	32 A	**-**	**25 kA**	**25 kA**	**25 kA**

		Upstream MCB											
		DX³ 10000 16 kA B/C/D curves			DX³ 25 kA B/C/D curves			DX³ 36 kA C curve			DX³ 50 kA B/C/D curves		
Downstream RCBO		≤25 A	32 A	40 to 120 A	≤25 A	32 A	40 to 125 A	≤25 A	32A	40 to 80 A	≤25 A	32 A	40 to 63 A
DX³ 6000 A B and C curves	≤20 A	**32 kA**	**32 kA**	**25 kA**	**50 kA**	**50 kA**	**25 kA**	**50 kA**	**50 kA**	**50 kA**	**50 kA**	**50 kA**	**50 kA**
	25 A	**-**	**32 kA**	**25 kA**	**-**	**50 kA**	**25 kA**	**-**	**50 kA**	**50 kA**	**-**	**50 KA**	**50 kA**
	32 A	**-**	**-**	**25 kA**	**-**	**-**	**25 kA**	**-**	**-**	**50 kA**	**-**	**-**	**50 kA**

Association and coordination with upstream Moulded Case Circuit Breakers (MCCBs), only for sensitivities 300mA and 1000mA :
. Three-phase network (+N) 230/240 V , in accordance with standard IEC 60947-2
. TT neutral earthing or TNS system

		Upstream MCCB											
		DPX³ 160 16 kA			DPX³ 160 25 kA			DPX³ 160 36 kA			DPX³ 160 50 kA		
Downstream RCBO		16 A	25 A	40 to 160 A	16 A	25 A	40 to 160 A	16 A	25 A	40 to 160 A	16 A	25 A	40 to 160 A
DX³ 6000 A B and C curves	≤13 A	**25 kA**	**25 kA**	**25 kA**	**40 kA**	**40 kA**	**40 kA**	**50 kA**	**50 kA**	**50 kA**	**50 kA**	**50 kA**	**50 kA**
	16 A	**-**	**25 kA**	**25 kA**	**-**	**40 kA**	**40 kA**	**-**	**50 kA**	**50 kA**	**-**	**50 KA**	**50 kA**
	20 A	**-**	**25 kA**	**25 kA**	**-**	**40 kA**	**40 kA**	**-**	**50 kA**	**50 kA**	**-**	**50 KA**	**50 kA**
	25 A	**-**	**-**	**25 kA**	**-**	**-**	**40 kA**	**-**	**-**	**50 kA**	**-**	**-**	**50 kA**
	32 A	**-**	**-**	**25 kA**	**-**	**-**	**40 kA**	**-**	**-**	**50 kA**	**-**	**-**	**50 kA**

5. GENERAL CHARACTERISTICS *(continued)*

Association and coordination with upstream Moulded Case Circuit Breakers (MCCBs), only for sensitivities 300mA and 1000mA:
. Three-phase network (+N) 230/240 V, in accordance with standard IEC 60947-2
. TT neutral earthing or TNS system

		Upstream MCCB			
		DPX³ 250 25 kA	DPX³ 250 36 kA	DPX³ 250 50 kA	DPX³ 250 70 kA
Downstream RCBO		≤ 250A	≤ 250A	≤ 250A	≤ 250A
DX³ 6000A B and C curves	≤32A	**40 kA**	**50 kA**	**50 kA**	**50 kA**

		Upstream MCCB				
		DPX / DPX-H 250		DPX / DPX-H 630	DPX / DPX-H 1250	DPX / DPX-H 1600
Downstream RCBO		25 A	40 to 250A	≤ 630A	≤ 1250A	≤ 1,600A
DX³ 6000A B and C curves	≤20 A	**50 kA**	**50 kA**	**50 kA**	**50 kA**	**50 kA**
	25A	**-**	**50 kA**	**50 kA**	**50 kA**	**50 kA**
	32A	**-**	**50 kA**	**50 kA**	**50 kA**	**50 kA**

		Upstream MCCB	
Downstream RCBO		DPX 250 ER AB	DPX 400 AB
DX³ 6000A B and C curves	≤32 A	**50 kA**	**50 kA**

Selectivity between two levels of protection
. The downstream MCB must always have a magnetic threshold and a rated current lower than those of the upstream protection.
. Selectivity or Discrimination is said to be total (T) if there is discrimination up to the value of breaking capacity (in accordance with standard EN/IEC 60947-2) of the downstream MCB.

Discrimination with upstream fuses, only for sensitivities 300mA and 1000mA:
. Discrimination limit with a voltage of 230 V ~ (Values in A)

		Upstream fuse gG type							
Downstream RCBO		32A	40A	50A	63A	80A	100A	125A	160A
DX³ 6000A B and C curves	10 A	**-**	**1600**	**2200**	**3200**	**3000**	**T**	**T**	**T**
	13A	**-**	**1400**	**1800**	**2600**	**3000**	**5600**	**T**	**T**
	16A	**-**	**1400**	**1800**	**2600**	**3000**	**5600**	**T**	**T**
	20A	**-**	**1200**	**1500**	**2200**	**2500**	**4600**	**T**	**T**
	25A	**-**	**-**	**1300**	**2000**	**2200**	**4100**	**5500**	**T**
	32A	**-**	**-**	**1200**	**1700**	**1900**	**3500**	**4500**	**T**

T = Total discrimination
.
The downstream RCBO must always have a magnetic threshold and rated current lower than those of the upstream circuit breaker.

5. GENERAL CHARACTERISTICS *(continued)*

Discrimination with upstream fuses, only for sensitivities 300mA and 1000mA :
. Discrimination limit with a voltage of 230 V ~ (Values in A)

		Upstream fuse aM type								
Downstream RCBO		25A	32A	40A	50A	63A	80A	100A	125A	160A
DX³ 6000A B and C curves	10A	**-**	**1100**	**1700**	**2500**	**5000**	**T**	**T**	**T**	**T**
	13A	**-**	**1000**	**1400**	**2100**	**4000**	**T**	**T**	**T**	**T**
	16A	**-**	**1000**	**1400**	**2100**	**4000**	**T**	**T**	**T**	**T**
	20A	**-**	**-**	**1300**	**1800**	**3400**	**5100**	**T**	**T**	**T**
	25A	**-**	**-**	**1100**	**1600**	**3000**	**4500**	**T**	**T**	**T**
	32A	**-**	**-**	**-**	**1300**	**2400**	**3800**	**5000**	**T**	**T**

Discrimination with upstream MCBs , only for sensitivities 300mA and 1000mA :
. Discrimination limit with a voltage of 230 V ~ (Values in A)

		Upstream MCB											
		DX³ 4500/6 kA - DX³ 6000/10 kA - DX³ 10000/16 kA B curve											
Downstream RCBO		10A	13A	16A	20A	25A	32A	40A	50A	63A	80A	100A	125A
DX³ 6000A B and C curves	10A	**-**	**-**	**-**	**80**	**100**	**128**	**160**	**200**	**252**	**3000**	**5000***	**T***
	13A	**-**	**-**	**-**	**-**	**100**	**128**	**160**	**200**	**252**	**2500**	**4000**	**6000***
	16A	**-**	**-**	**-**	**-**	**-**	**128**	**160**	**200**	**252**	**2000**	**3600**	**5500***
	20A	**-**	**-**	**-**	**-**	**-**	**-**	**160**	**200**	**252**	**1600**	**3000**	**4000**
	25A	**-**	**-**	**-**	**-**	**-**	**-**	**-**	**200**	**252**	**1300**	**2400**	**3300**
	32A	**-**	**-**	**-**	**-**	**-**	**-**	**-**	**-**	**252**	**1000**	**1800**	**2700**

		Upstream MCB											
		DX³ 3000 - DX³ 4500/6 kA - DX³ 6000/10 kA - DX³ 10000/16 kA C curve											
Downstream RCBO		10A	13A	16A	20 A	25A	32A	40A	50A	63A	80A	100A	125A
DX³ 6000A B and C curves	10A	**-**	**98**	**120**	**150**	**187**	**240**	**300**	**375**	**472**	**3000**	**5000***	**T***
	13A	**-**	**-**	**120**	**150**	**187**	**240**	**300**	**375**	**472**	**2500**	**4000***	**6000***
	16A	**-**	**-**	**-**	**150**	**187**	**240**	**300**	**375**	**472**	**2000**	**3600***	**5500***
	20A	**-**	**-**	**-**	**-**	**187**	**240**	**300**	**375**	**472**	**1600**	**3000**	**4000***
	25A	**-**	**-**	**-**	**-**	**-**	**240**	**300**	**375**	**472**	**1300**	**2400**	**3300***
	32A	**-**	**-**	**-**	**-**	**-**	**-**	**300**	**375**	**472**	**1000**	**1800**	**2700**

. T = Total discrimination

. *: If the discrimination value stated in the table is greater than the breaking capacity of the upstream circuit breaker then the breaking capacity of the upstream device must be taken as the discrimination value (the discrimination value may not exceed the breaking capacity of the upstream device).

5. GENERAL CHARACTERISTICS *(continued)*

Discrimination with upstream modular MCBs , only for sensitivities 300mA and 1000mA :
. Discrimination limit with a voltage of 230 V ~ (Values in A)

		Upstream MCB											
		DX³ 4500/6 kA - DX³ 6000/10 kA - DX³ 10000/16 kA D curve											
Downstream RCBO		10A	13A	16A	20A	25A	32A	40A	50A	63A	80A	100A	125A
DX³ 6000A B/C curves	10A	**-**	**-**	**192**	**240**	**300**	**384**	**480**	**600**	**756**	**3000**	**5000**	**T**
	13A	**-**	**-**	**-**	**240**	**300**	**384**	**480**	**600**	**756**	**2500**	**4000**	**6000**
	16A	**-**	**-**	**-**	**240**	**300**	**384**	**480**	**600**	**756**	**2000**	**3600**	**5500**
	20A	**-**	**-**	**-**	**-**	**300**	**384**	**480**	**600**	**756**	**1600**	**3000**	**4000**
	25A	**-**	**-**	**-**	**-**	**-**	**384**	**480**	**600**	**756**	**1300**	**2400**	**3300**
	32A	**-**	**-**	**-**	**-**	**-**	**-**	**480**	**600**	**756**	**1100**	**1450**	**2700**

		Upstream MCB										
		DX³ 25 kA B curve										
Downstream RCBO		10A	16A	20A	25A	32A	40A	50A	63A	80 A	100A	12 A
DX³ 6000A B and C curves	10A	**-**	**-**	**80**	**100**	**500**	**700**	**1000**	**1800**	**3000**	**5000**	**T**
	13A	**-**	**-**	**-**	**100**	**400**	**600**	**1200**	**1500**	**2500**	**4000**	**T**
	16A	**-**	**-**	**-**	**-**	**300**	**500**	**700**	**1300**	**2000**	**3600**	**5500**
	20A	**-**	**-**	**-**	**-**	**-**	**400**	**500**	**1000**	**1600**	**3000**	**4000**
	25A	**-**	**-**	**-**	**-**	**-**	**-**	**500**	**800**	**1300**	**2400**	**3300**
	32A	**-**	**-**	**-**	**-**	**-**	**-**	**500**	**600**	**1000**	**1800**	**2700**

		Upstream MCB										
		DX³ 25 kA C curve										
Downstream RCBO		10A	16A	20A	25A	32A	40A	50A	63A	80A	100 A	125 A
DX³ 6000A B and C curves	10A	**-**	**120**	**150**	**187**	**500**	**700**	**1000**	**1800**	**3000**	**5000**	**T**
	13A	**-**	**120**	**150**	**187**	**400**	**600**	**1200**	**1500**	**2500**	**4000**	**T**
	16A	**-**	**-**	**150**	**187**	**300**	**500**	**700**	**1300**	**2000**	**3600**	**5500**
	20A	**-**	**-**	**-**	**187**	**300**	**400**	**500**	**1000**	**1600**	**3000**	**4000**
	25 A	**-**	**-**	**-**	**-**	**240**	**400**	**500**	**800**	**1300**	**2400**	**3300**
	32A	**-**	**-**	**-**	**-**	**-**	**300**	**500**	**600**	**1000**	**1800**	**2700**

T = Total discrimination

5. GENERAL CHARACTERISTICS *(continued)*

Discrimination with upstream MCBs, only for sensitivities 300mA and 1000mA :
. Discrimination limit with a voltage of 230 V ~ (Values in A)

		Upstream MCB										
		DX³ 25 kA D curve										
Downstream RCBO		10A	16A	20A	25A	32A	40A	50A	63A	80A	10 A	125 A
DX³ 6000A B and C curves	10A	**-**	**192**	**240**	**300**	**500**	**700**	**1000**	**1800**	**3000**	**5000**	**T**
	13A	**-**	**-**	**240**	**300**	**400**	**600**	**1200**	**1500**	**2500**	**4000**	**T**
	16A	**-**	**-**	**240**	**300**	**384**	**500**	**700**	**1300**	**2000**	**3600**	**5500**
	20A	**-**	**-**	**-**	**300**	**384**	**480**	**600**	**1000**	**1600**	**3000**	**4000**
	25A	**-**	**-**	**-**	**-**	**384**	**480**	**600**	**800**	**1300**	**2400**	**3300**
	32A	**-**	**-**	**-**	**-**	**-**	**480**	**600**	**756**	**1100**	**1450**	**2700**

		Upstream MCB								
		DX³ 36 kA/DX³ 50 kA C curve								
Downstream RCBO		10A	16A	20A	25A	32A	40A	50A	63A	80A
DX³ 6000A B and C curves	10A	**-**	**120**	**150**	**210**	**500**	**700**	**1000**	**1800**	**3000**
	13A	**-**	**120**	**150**	**200**	**400**	**600**	**1200**	**1500**	**2500**
	16A	**-**	**-**	**150**	**187**	**300**	**500**	**700**	**1300**	**2000**
	20A	**-**	**-**	**-**	**187**	**300**	**400**	**500**	**1000**	**1600**
	25A	**-**	**-**	**-**	**-**	**240**	**400**	**500**	**800**	**1300**
	32A	**-**	**-**	**-**	**-**	**-**	**300**	**500**	**600**	**1000**

		Upstream MCB														
		DX³ 50 kA B curve							DX³ 50 kA D curve							
Downstream RCBO		≤16A	2 A	25A	32A	40A	50A	63A	10A	16A	20A	25A	32A	40A	50A	63A
DX³ 6000A B and C curves	10A	**-**	**150**	**210**	**500**	**700**	**1000**	**1800**	**-**	**192**	**240**	**300**	**500**	**700**	**1000**	**1800**
	13A	**-**	**-**	**200**	**400**	**600**	**1200**	**1500**	**-**	**-**	**240**	**300**	**400**	**600**	**1200**	**1500**
	16A	**-**	**-**	**-**	**300**	**500**	**70**	**1000**	**-**	**-**	**240**	**300**	**384**	**500**	**700**	**1300**
	20A	**-**	**-**	**-**	**-**	**400**	**500**	**1000**	**-**	**-**	**-**	**300**	**384**	**480**	**600**	**1000**
	25A	**-**	**-**	**-**	**-**	**-**	**500**	**800**	**-**	**-**	**-**	**-**	**384**	**480**	**600**	**800**
	32A	**-**	**-**	**-**	**-**	**-**	**500**	**600**	**-**	**-**	**-**	**-**	**-**	**480**	**600**	**756**

T = Total discrimination
Discrimination is said to be total if there is discrimination up to the value of the breaking capacity (in accordance with EN 60947-2) of the downstream RCBO.
The downstream RCBO must always have a magnetic threshold and rated current lower than those of the upstream circuit breaker.

5. GENERAL CHARACTERISTICS *(continued)*

Discrimination with upstream Moulded Case Circuit Breakers (MCCBs) , only for sensitivities 300mA and 1000mA :
. Discrimination limit with a voltage of 230 V ~ (Values in A)

		Upstream MCCB							
		DPX³ 160 16 kA to 50 kA							
Downstream RCBO		16A	25A	40A	63A	80A	100A	125A	160A
DX³ 6000A B and C curves	10A	**5**	**T**	**T**	**T**	**T**	**T**	**T**	**T**
	13A	**-**	**T**	**T**	**T**	**T**	**T**	**T**	**T**
	16A	**-**	**T**	**T**	**T**	**T**	**T**	**T**	**T**
	20A	**-**	**5**	**5**	**5**	**5**	**6**	**T**	**T**
	25A	**-**	**-**	**4.5**	**4.5**	**4.5**	**4.5**	**T**	**T**
	32A	**-**	**-**	**-**	**3**	**4**	**4**	**T**	**T**

		Upstream MCCB		
		DPX³ 250		
Downstream RCBO		40A	100A	160 to 250A
DX³ 6000A B and C curves	10A	**T**	**T**	**T**
	13A	**T**	**T**	**T**
	16A	**T**	**T**	**T**
	20A	**5**	**T**	**T**
	25A	**4**	**T**	**T**
	32A	**-**	**5**	**T**

		Upstream MCCB				
		DPX 250 / DPX-H 250 Thermal-magnetic				
Downstream RCBO		25A	40A	63A	100A	160 to 250A
DX³ 6000A B and C curves	10A	**5**	**5**	**5**	**T**	**T**
	13A	**4**	**4**	**4**	**T**	**T**
	16A	**4**	**4**	**4**	**T**	**T**
	20A	**-**	**4**	**4**	**T**	**T**
	25A	**-**	**3**	**3**	**T**	**T**
	32A	**-**	**-**	**2**	**5**	**T**

T = Total discrimination

5. GENERAL CHARACTERISTICS *(continued)*

Discrimination with upstream Moulded Case Circuit Breakers (MCCBs) , only for sensitivities 300mA and 1000mA :
. Discrimination limit with a voltage of 230 V ~ (Values in A)

		Upstream MCCB				
		DPX 250 / DPX-H 250 Electronic				DPX / DPX-H 630 / 1250 / 1600 DMX³ 2500 / 4000
Downstream RCBO		40A	100A	160A	250A	160 to 4000A
DX³ 6000A B and C curves	10A	**T**	**T**	**T**	**T**	**T**
	13A	**T**	**T**	**T**	**T**	**T**
	16A	**T**	**T**	**T**	**T**	**T**
	20A	**5**	**T**	**T**	**T**	**T**
	25A	**4**	**T**	**T**	**T**	**T**
	32A	**-**	**5**	**T**	**T**	**T**

		Upstream MCCB		
		DPX 250 ER AB		DPX 400 AB
Downstream RCBO		90A	130 to 240A	320 and 400A
DX³ 6000A B and C curves	10A	**T**	**T**	**T**
	13A	**T**	**T**	**T**
	16A	**T**	**T**	**T**
	20A	**T**	**T**	**T**
	25A	**T**	**T**	**T**
	32A	**5**	**T**	**T**

T = Total discrimination

6. COMPLIANCE AND APPROVALS

In accordance with standards:
. EN/IEC 61009-1 (NF C 61440)
. EN/IEC 62423 (F type)

Usage in special conditions:
. Category C compliant (testing temperature range range from -25°C to +70°C, resistant to salt spray) in accordance with the classification defined in Appendix Q of standard IEC/EN 60947-1

Respect for the environment – Compliance with European Union Directives:
. Compliance with Directive 2002/95/EC of 27/01/03 known as "RoHS" which provides for a restriction on the use of dangerous substances such as lead, mercury, cadmium, hexavalent chromium and polybrominated biphenyl (PBB) and polybrominated diphenyl ether (PBDE) brominated flame retardants from 1st July 2006
. Compliance with the Directive 91/338/EEC of 18/06/91 and decree 94-647 of 27/07/04

Plastic materials:
. Halogen free plastic materials
. Labelling of parts compliant with ISO 11469 and ISO 1043.

Packaging:
. Design and manufacture of packaging compliant with decree 98-638 of 20/07/98 and Directive 94/62/EC

Approvals obtained:
. France: NF

7. CURVES

Thermal-magnetic tripping curve range typical of B and C curve RCBOs:

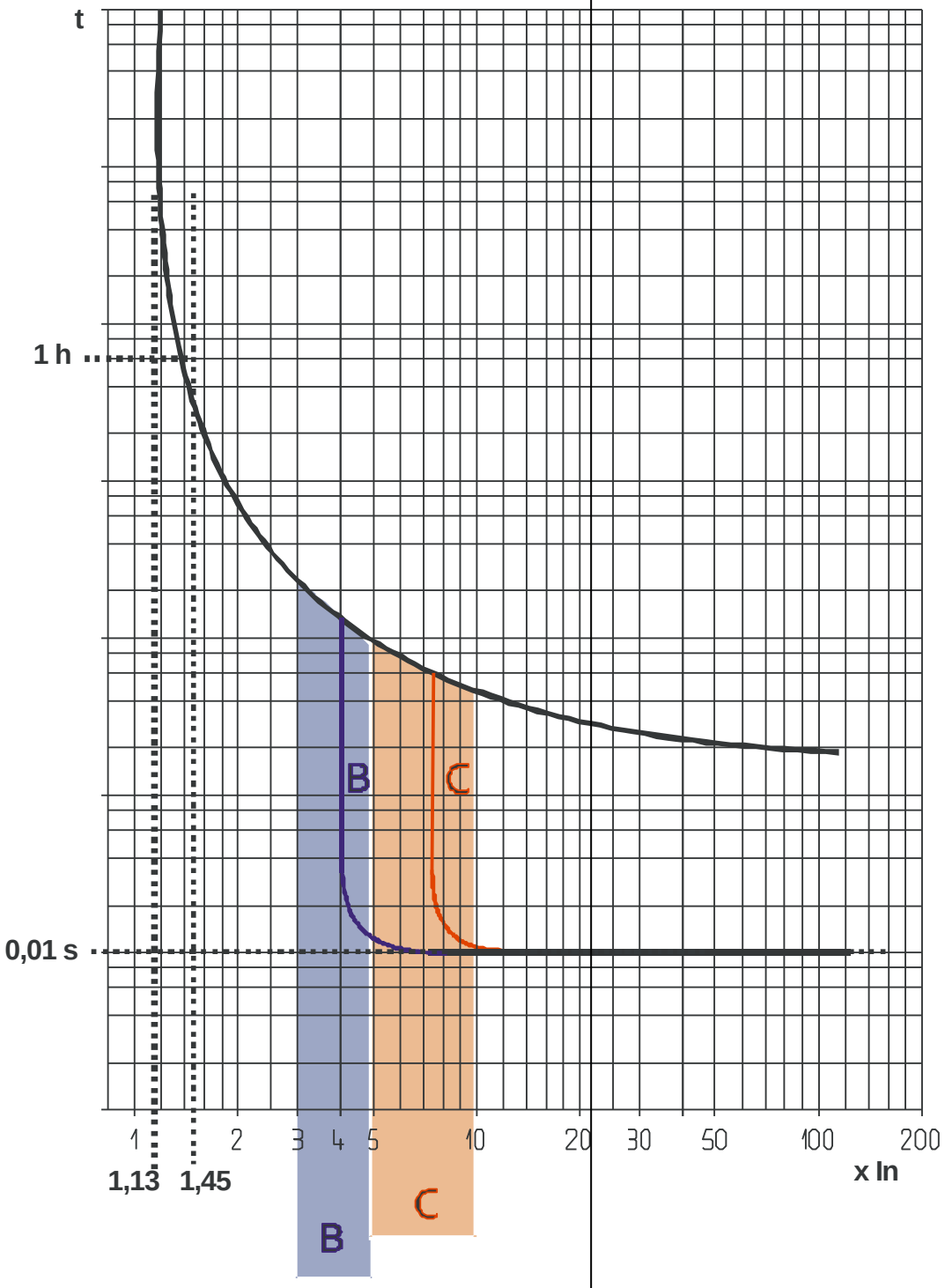

Thermal tripping at ambient temperature = 30°C
In = RCBO rated current

7. CURVES *(continued)*

Average thermal-magnetic tripping curves range typical of B curve RCBOs:

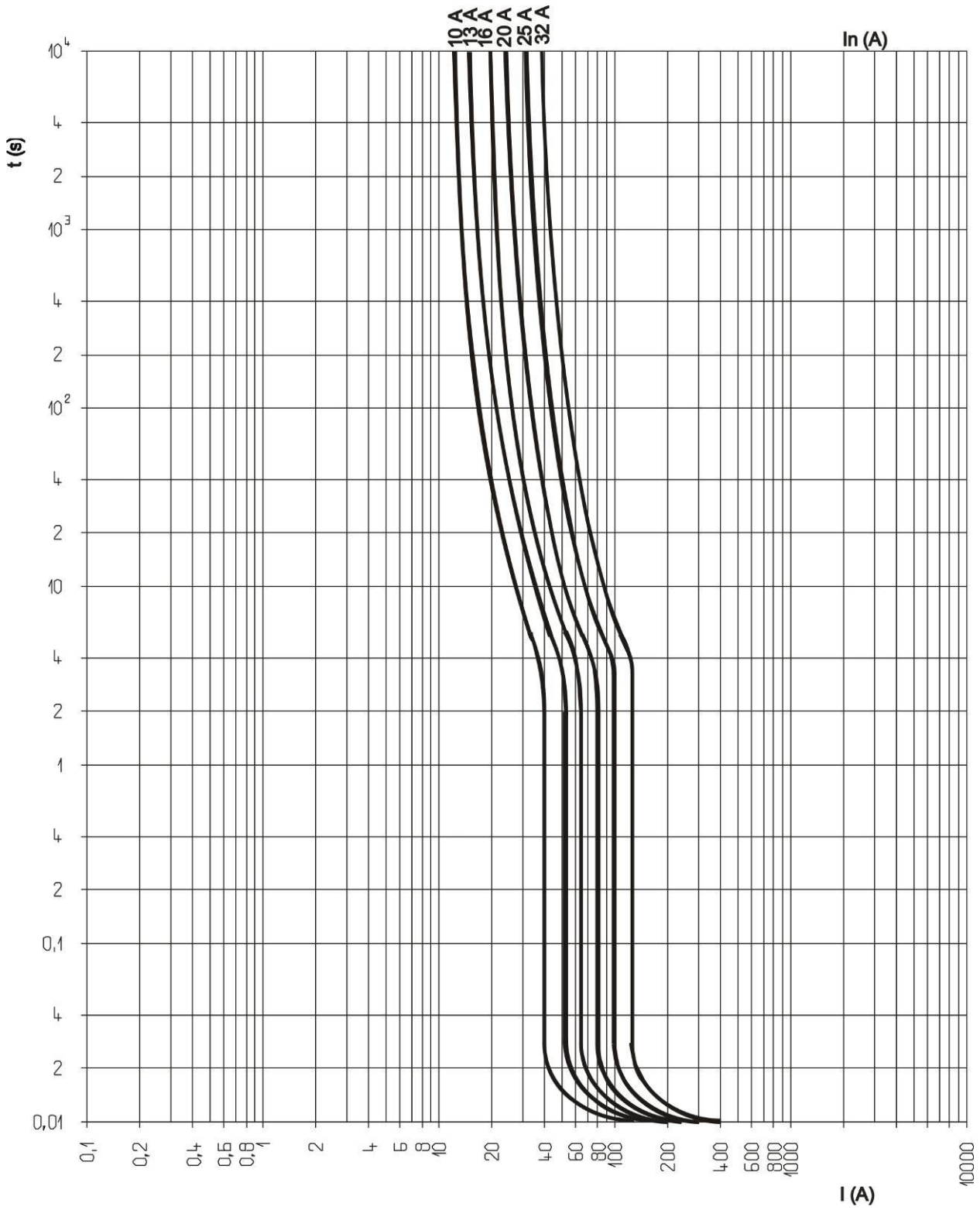

7. CURVES *(continued)*

Average thermal-magnetic tripping curves range typical of C curve circuit RCBOs:

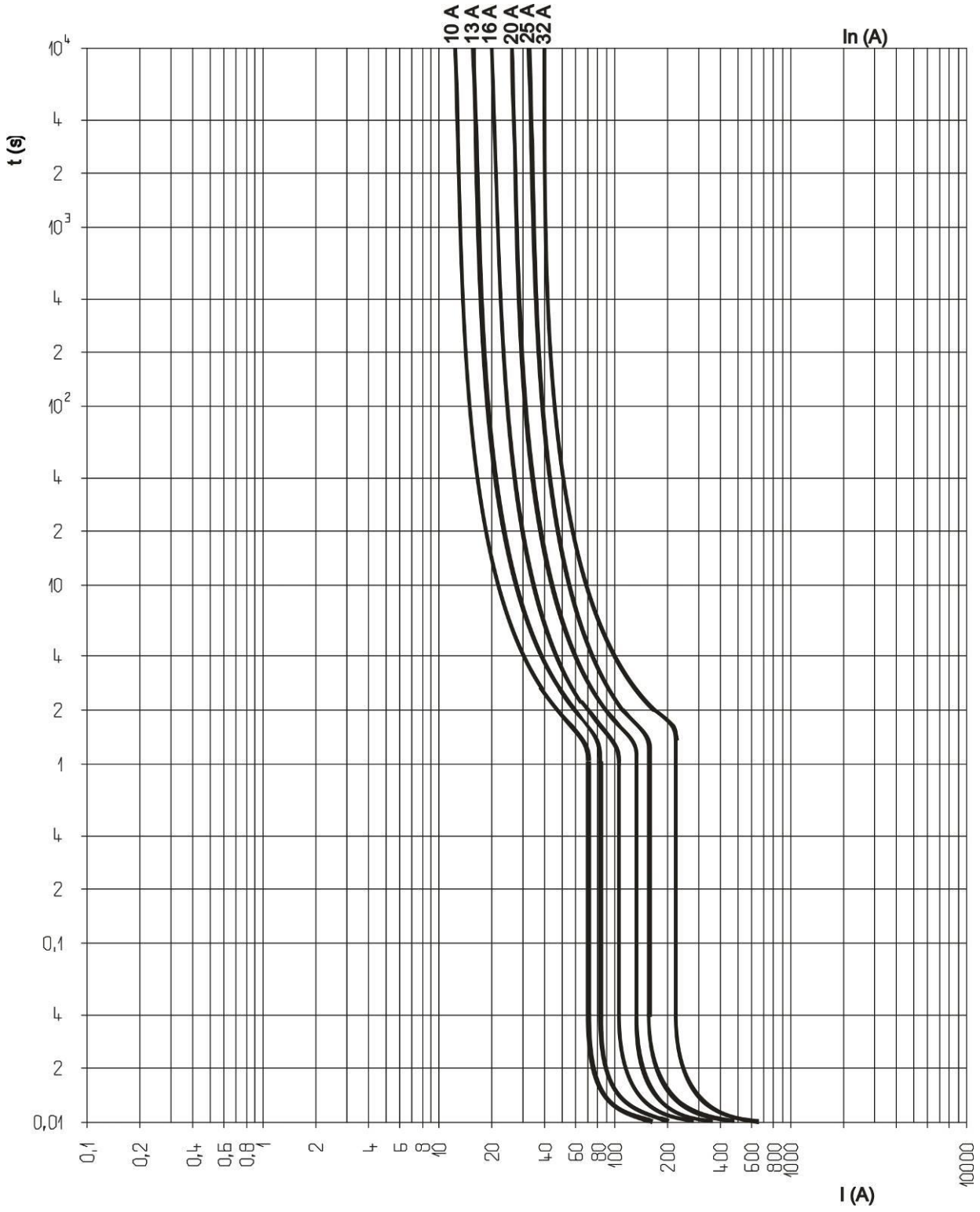

7. CURVES *(continued)*

Current limiting curves:

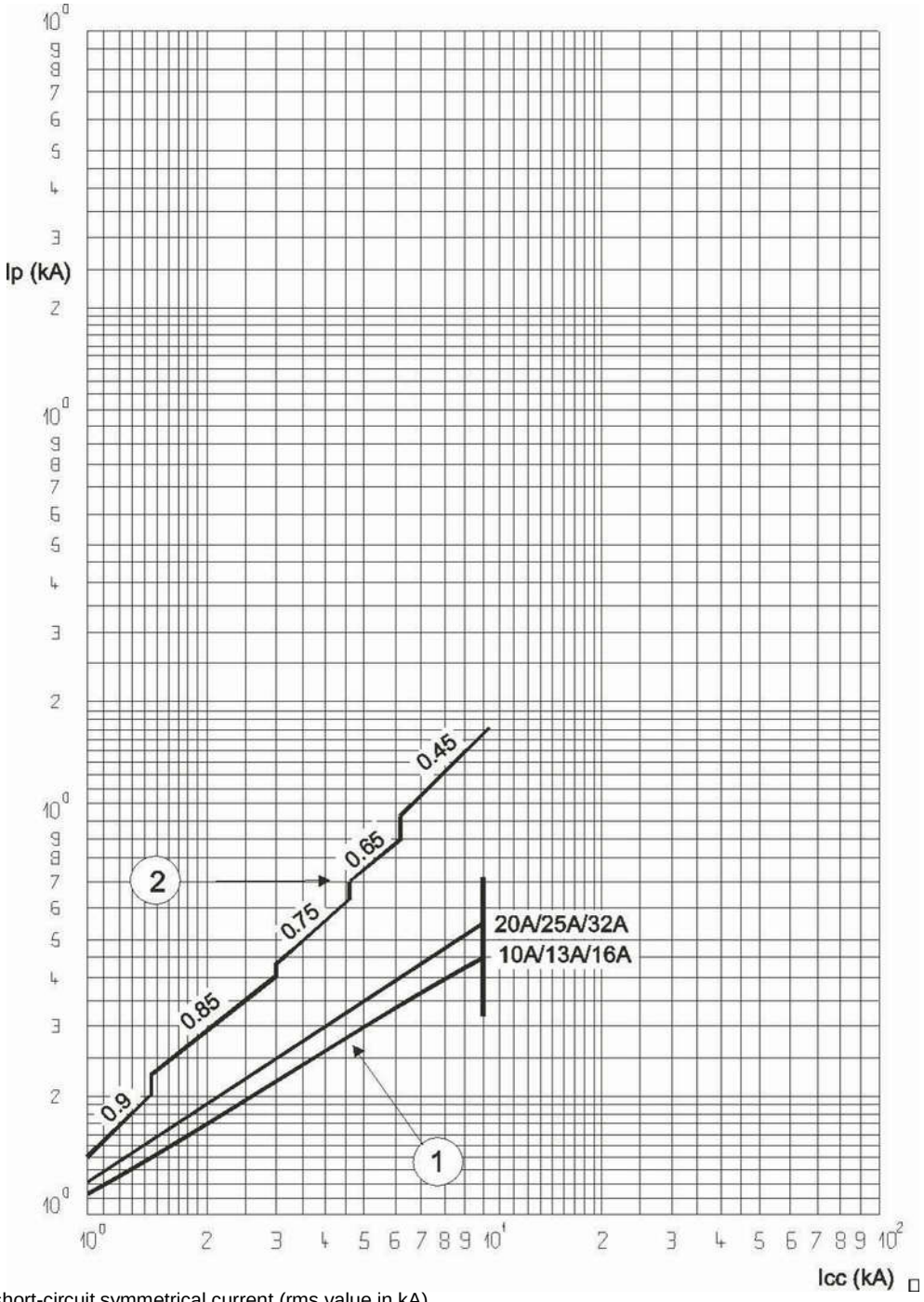

Icc = Prospective short-circuit symmetrical current (rms value in kA)
Ip = Maximum peak value (kA)
① = Short-circuit rms currents (max. peak)
② = Unlimited peak currents (max), corresponding to power factors shown above (0.15 to 0.9)

7. CURVES *(continued)*

Thermal stress limiting curves:
. B curve 4-pole RCBO

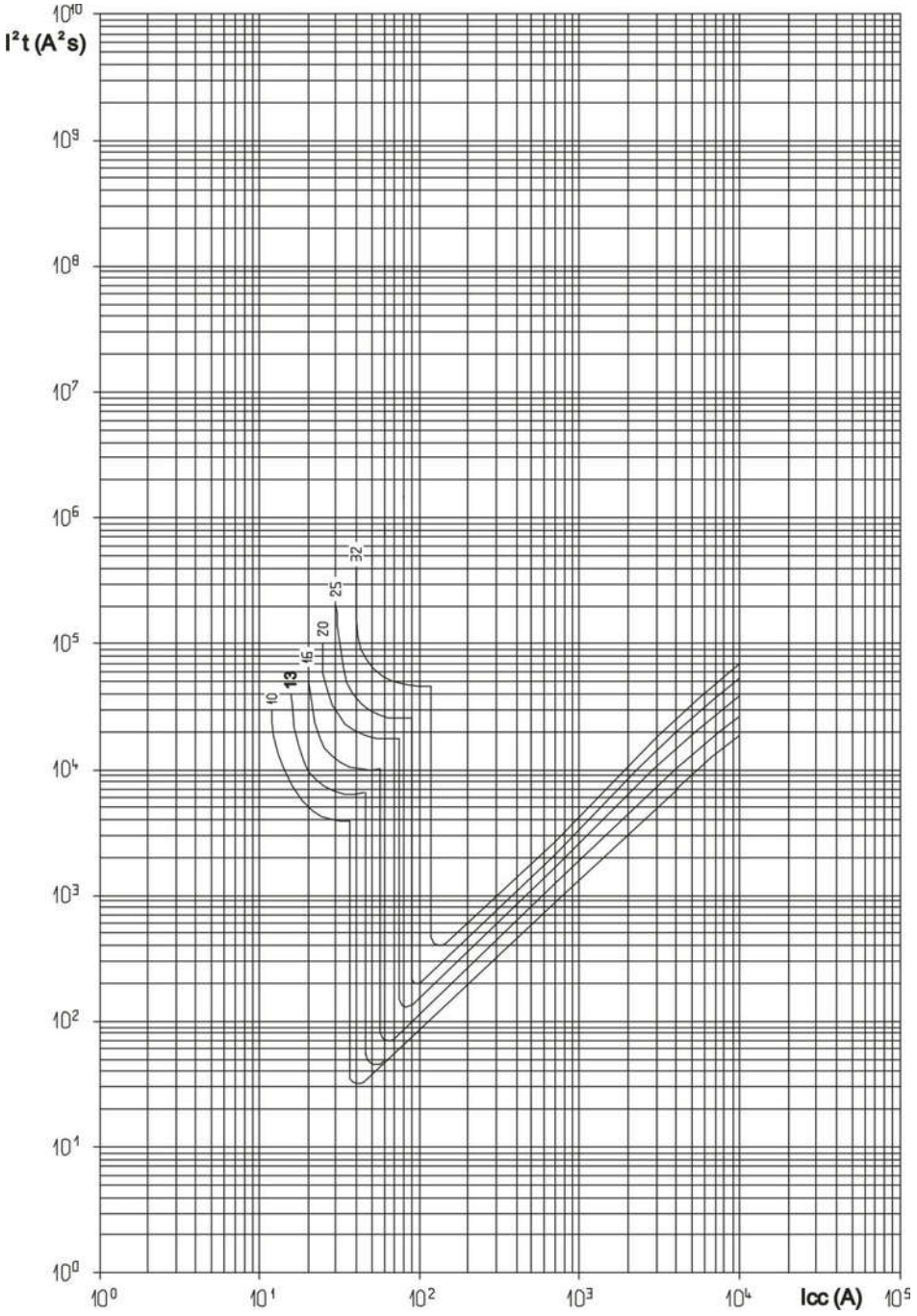

Icc = Prospective short-circuit symmetrical current (rms value in kA)
I²t = Limited thermal stress (in A²s)

7. CURVES *(continued)*

Thermal stress limiting curves:
. C curve 4-pole RCBO

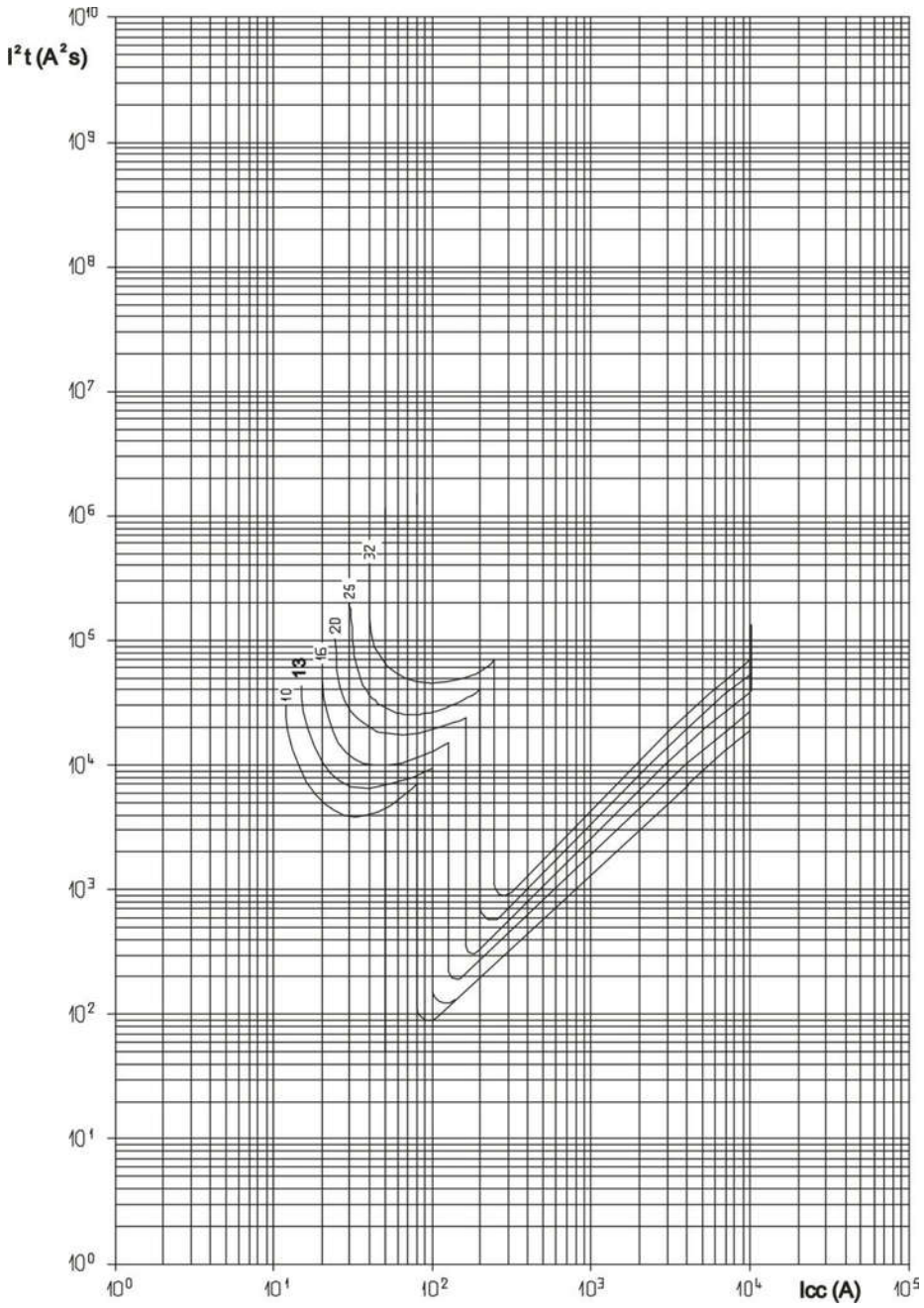

Icc = Prospective short-circuit symmetrical current (rms value in kA)
I²t = Limited thermal stress (in A²s)

7. CURVES *(continued)*

Tripping current curves:
. Tripping time curve depending on the value of the fault current:

AC TYPE

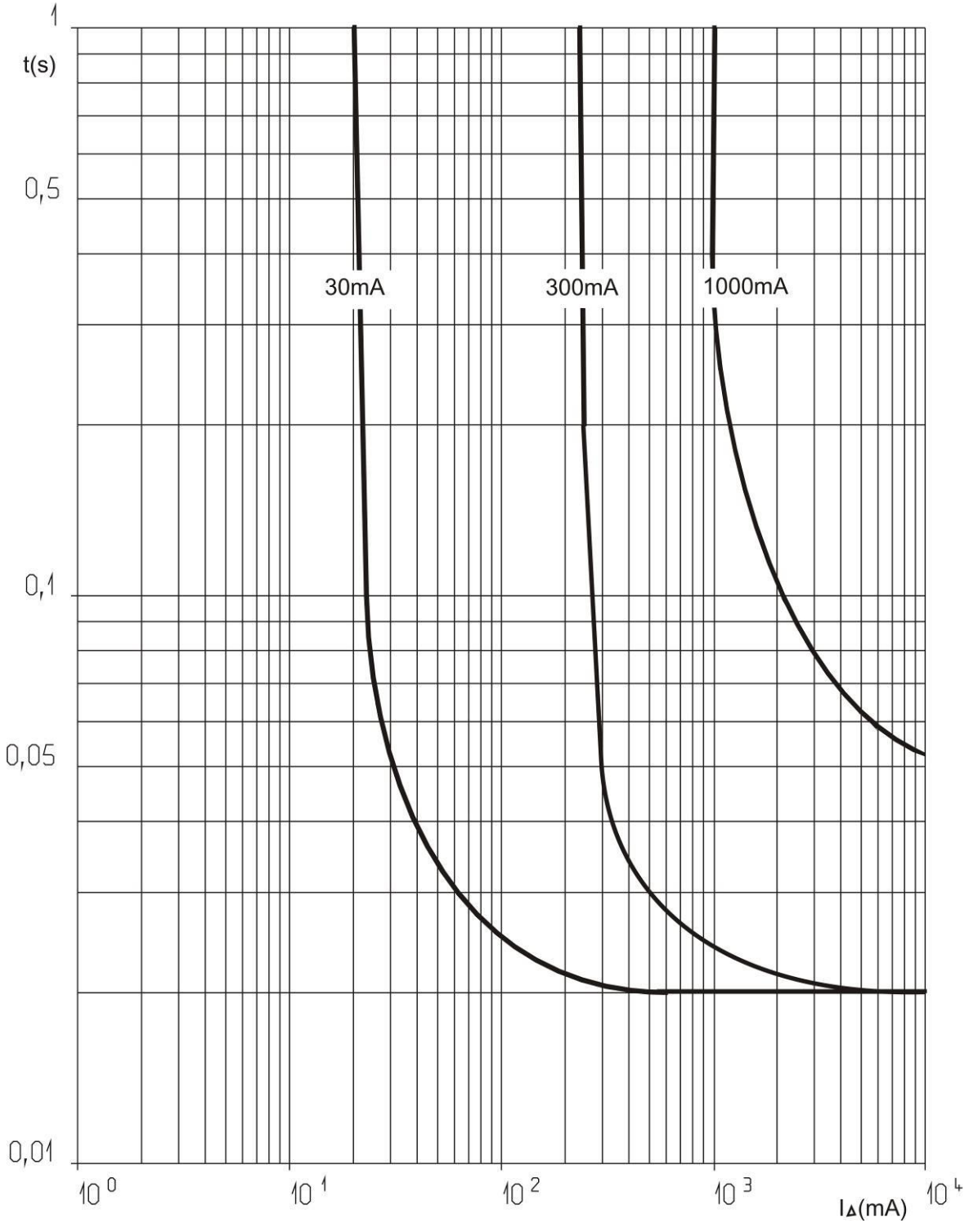

7. CURVES *(continued)*

Tripping current curves:
. Tripping time curve depending on the value of the fault current:

A TYPE

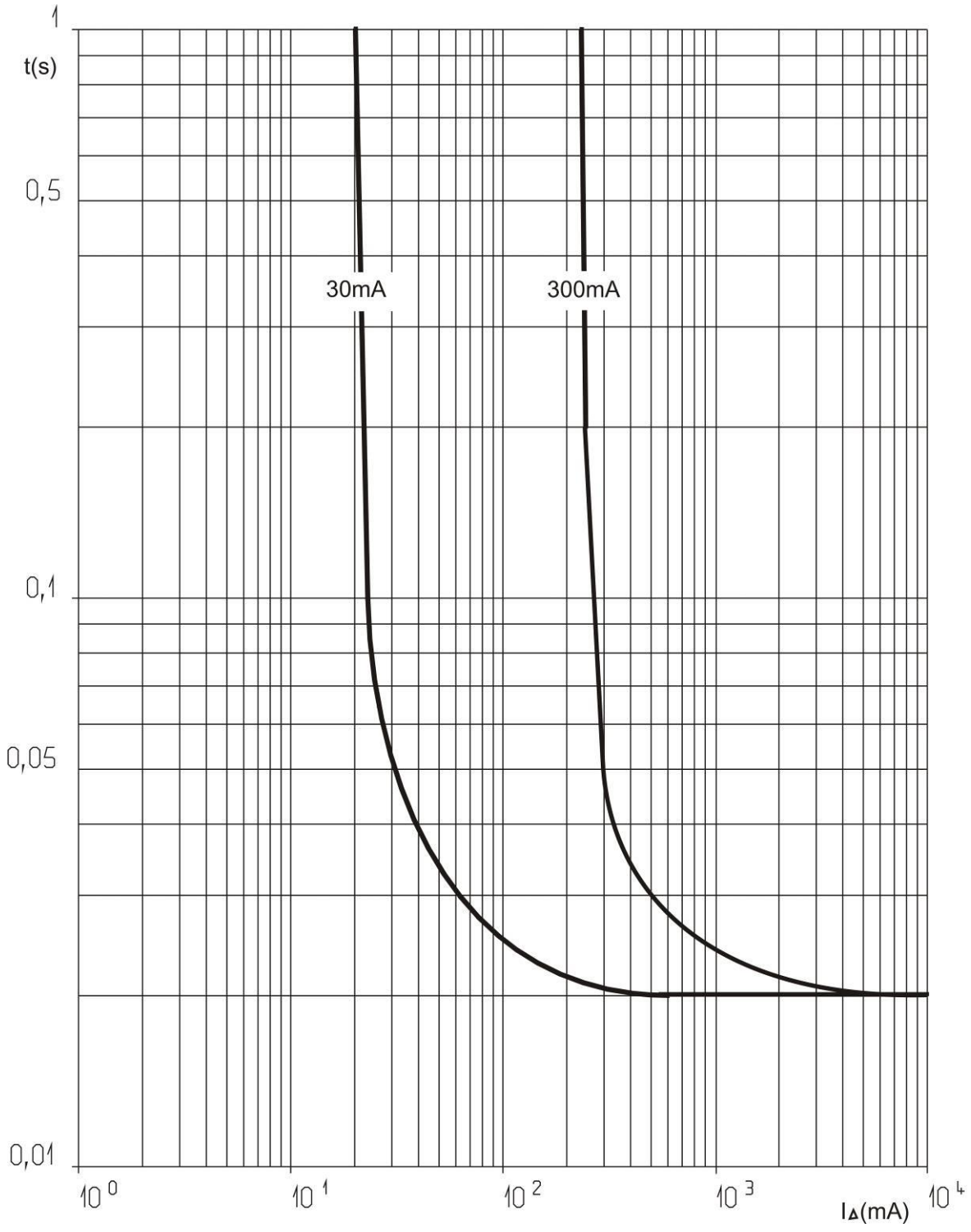

7. CURVES *(continued)*

Tripping current curves:
. Tripping time curve depending on the value of the fault current:

F TYPE

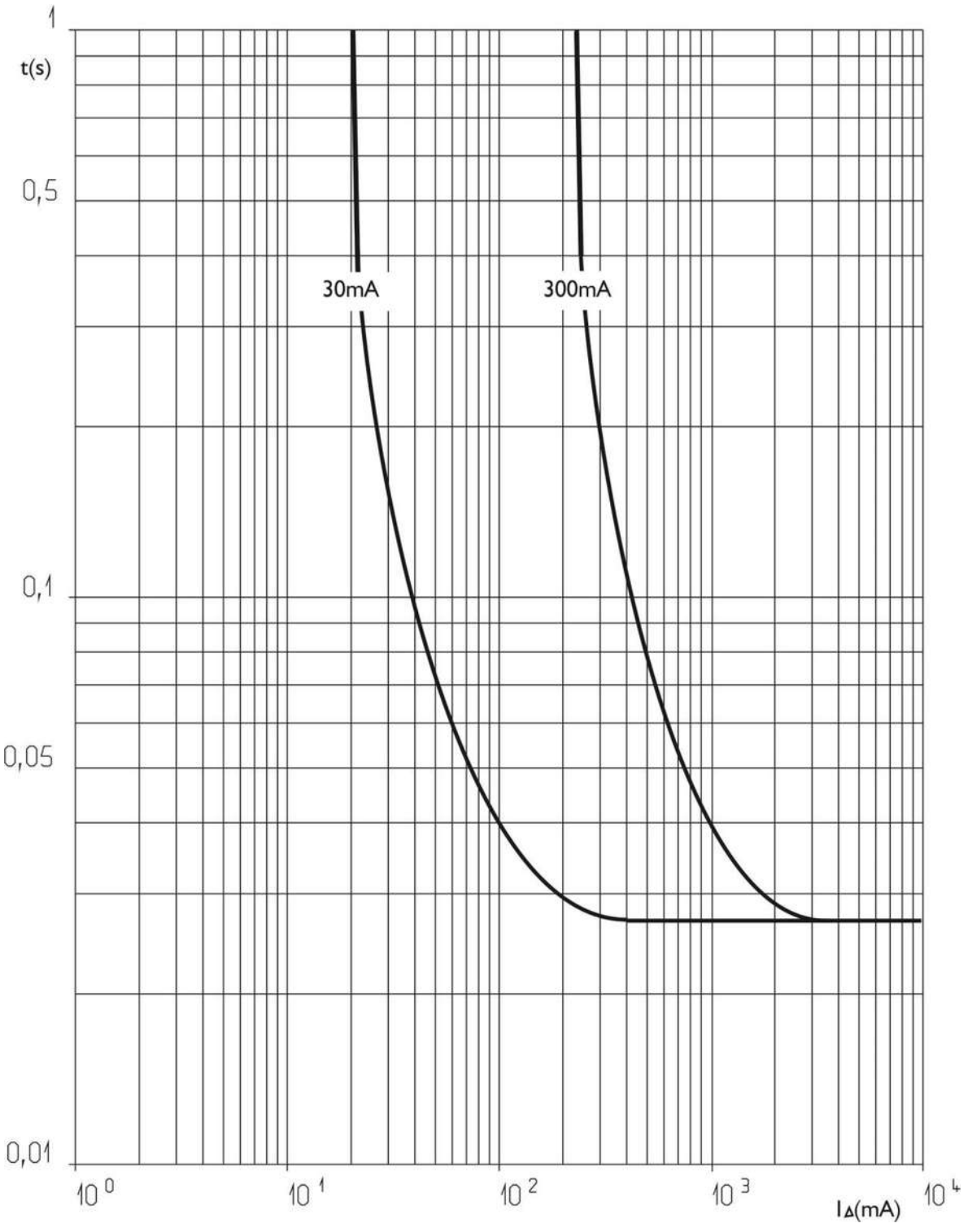

8. AUXILIARIES AND ACCESSORIES

Wiring accessories:
. Supply busbar:
-HX^3 4-pole universal supply busbar (Cat. No. 4 049 44, 9 45)
. Connection Terminals for aluminium cable with max. 50 mm² cross-section (Cat. No. 4 063 10)
. Sealable screw cover (Cat. No. 4 063 04)

Signalling auxiliaries:
. Auxiliary contact (0.5 module, Cat. No. 4 062 58)
. Fault signalling contact (0.5 module, Cat. No. 4 062 60)
. Auxiliary contact that can be changed into fault signalling contact (0.5 module, Cat. No. 4 062 62)
. Auxiliary contact + fault signalling contact that can be changed into 2 auxiliary contacts (1 module, Cat. No. 4 062 66)

Control auxiliaries:
. Shunt trip (1 module, Cat. No. 4 062 76, 2 78)
. Undervoltage release (1 module, Cat. No. 4 062 80, 82)
. Stand-alone release for N/C push-button
(1.5 module, Cat. No. 4 062 87)

Motor driven control modules:.
Motor-driven control module (1 module, Cat. No. 4 062 91)
. Motor-driven control module with integrated automatic reset
(2 modules, Cat. Nos. 4 062 93, 95)

Possible combinations of auxiliaries and RCBOs:
. The auxiliaries are installed to the left of the RCBOs
. Maximum number of auxiliaries = 3
. Maximum number of 1 module signalling auxiliaries = 2
. Maximum number of control auxiliaries
(Cat. Nos. 4 062 76 to 4 062 87) = 1
. The control auxiliary trip (Cat. Nos. 4 062 76 to 4 062 87) must mandatorily be placed to the left of the signalling auxiliaries (Cat. Nos. 4 062 58 to 4 062 66) where the auxiliaries from these 2 families are connected to the same RCBO

Sealing:
. Possible in the open or closed positions

Locking options:
. Via padlock 5 mm in diameter (Cat. No. 4 063 13) or padlock 6 mm in diameter (Cat. No. 227 97) and padlock support (Cat. No. 4 063 03)

Installation software:
. XL PRO^3

9. SAFETY

. For your safety your electrical installation is equipped with residual current protection and this must be tested periodically. In the absence of any national regulations on the time period required for this, Legrand recommends that this test be carried out every month: press the "T" test button, the device should trip. Please call an electrician immediately if this does not happen as the safety level of your installation has been reduced
. The presence of residual current protection does not remove the need to observe all the precautions associated with using electrical energy.