Enclosures can be Factory Modified (Milling, Drilling, Printing etc.)
Contact Factory mjm@hammondmfg.com for quotes

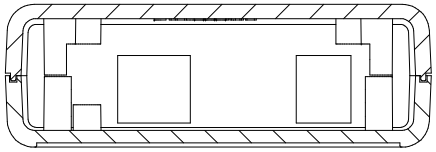

SECTION B-B

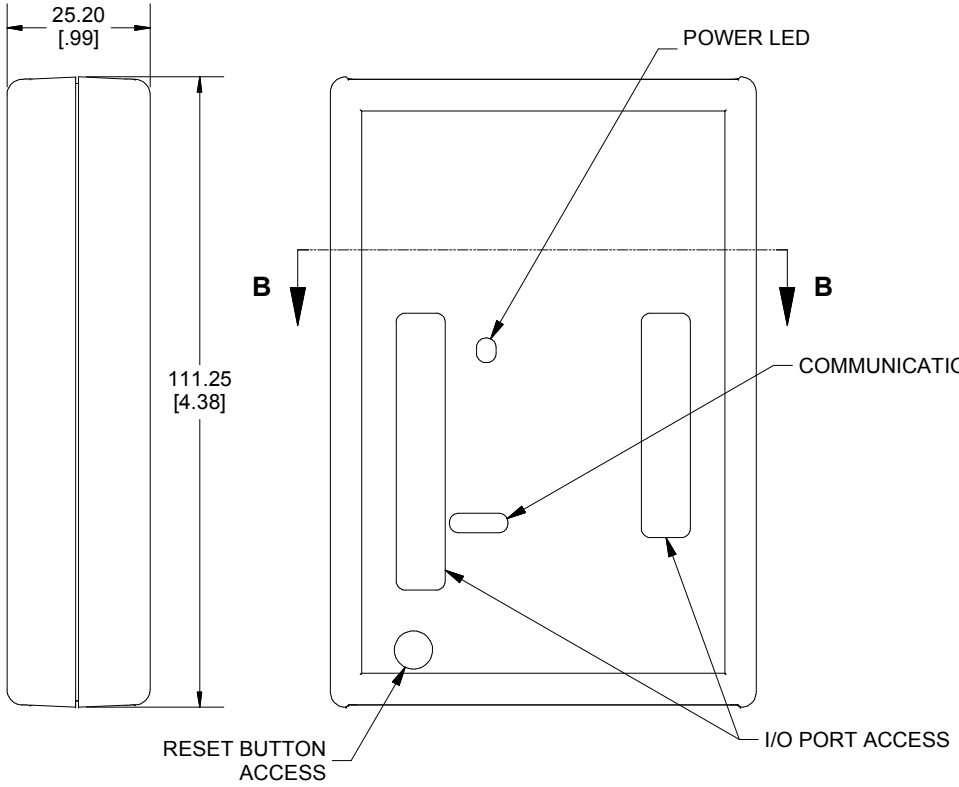

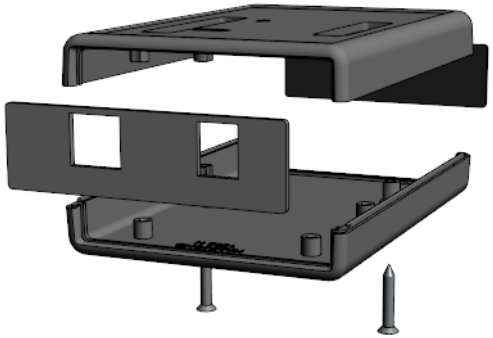

NOTE: 1593UNO ENCLOSURE IS BASED ON HAMMOND STANDARD 1593N
PLEASE SEE 1593N DRAWING FOR STANDARD ENCLOSURE SPECIFICATIONS

ASSEMBLY - VIEW FROM TOP SIDE

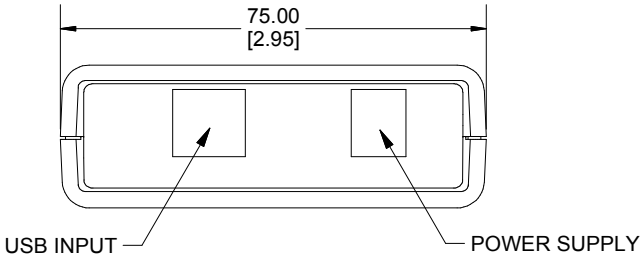

NOTE

Purchased assembly includes top and bottom cover, front and rear end panels, 2 cover screws, 1 black rubber foot, and 1 plastic spacer. (P.C. Board not included)
Enclosure molded from ABS Plastic.

PART NUMBERS

1593HAMUNO Enclosure	
Black Enclosure	1593HAMUNOBK
Grey Enclosure	1593HAMUNOGY
Translucent Blue Enclosure	1593HAMUNOTBU

Dimensions:
mm
[inches]

HAMMOND MANUFACTURING™

1593HAMUNO

www.hammondmfg.com