MURR ELEKTRONIK
stay connected

RMM 11/24 OUTPUT RELAY

IN: 24 VAC/DC - OUT: 250 VAC/DC / 5 A

1 relay; 1 NO contact
5 A
24 V AC/DC
Screw terminals

Link to Product

Illustration



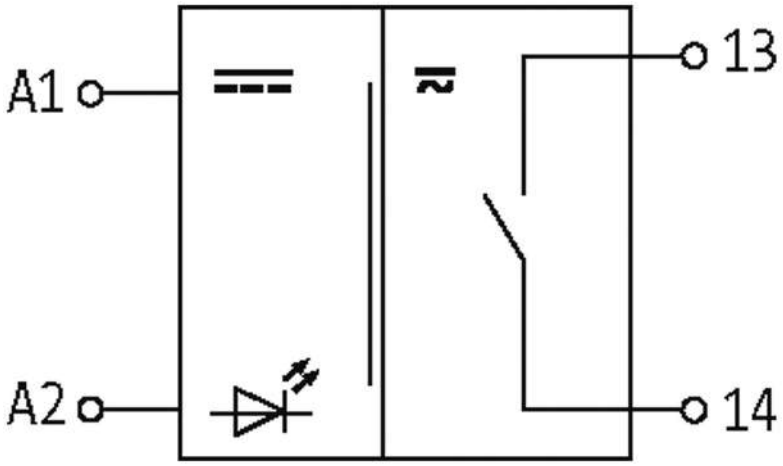

The information in this brochure has been compiled with the utmost care.
Liability for the correctness completeness and topicality of the information is restricted to gross negligence. Version: 06/17

Murrelektronik Ltd. | Pendlebury Industrial Estate, Albion Street, Swinton | Manchester M27 4FG | Fon +44 161 72831-33 | Fax +44 161 72831-30 |
shop@murrelektronik.co.uk | shop.murrelektronik.co.uk

MURR ELEKTRONIK
stay connected

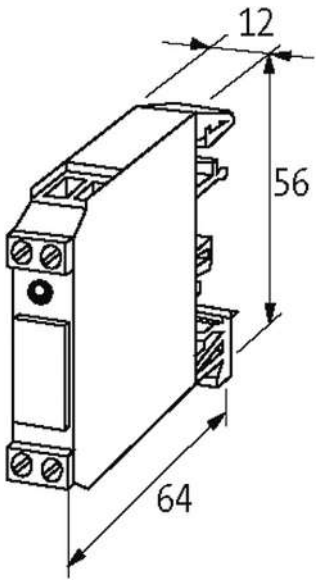

Product may differ from Image

Input	
Connection voltage - current	24 V AC/DC (19.2...30 V AC/DC) - 15 mA
LED display	LED (red)
Utilization category	
AC-1	5 A (24/110/230 V AC)
AC-15	3 A (24/110/230 V AC)
DC-13	1.5 A (24 V DC); 0.3 A (110 V DC); 0.15 A (230 V DC)
General data	
Mech./ elect. life	20.000.000 switching cycles/load dependent
Test isolation voltage	4 kV
Mounting method	DIN-rail mountable TH35 or G32 (EN 60715)
Temperature range	-20...+50 °C
Dimensions H × W × D	56×12×65 mm
Output	
Switching voltage	max. 250 V AC/300 V DC
Switching current per output	max. 5 A
Min. load current	100 mA
Power rating (voltage dependent)	max. 1250 VA/240 W
Switching frequency	max. 10 Hz
Contact material	Ag Ni 0.15 hv; Ag hv
Energize/release/contact bounce time	10/15/1.5 ms
Commercial data	
country of origin	CZ
customs tariff number	85364900
EAN	4048879027496
eClass	27371001

The information in this brochure has been compiled with the utmost care.
Liability for the correctness completeness and topicality of the information is restricted to gross negligence. Version: 06/17

Murrelektronik Ltd. | Pendlebury Industrial Estate, Albion Street, Swinton | Manchester M27 4FG | Fon +44 161 72831-33 | Fax +44 161 72831-30 | shop@murrelektronik.co.uk | shop.murrelektronik.co.uk

minimum order quantity	1

The information in this brochure has been compiled with the utmost care.
Liability for the correctness completeness and topicality of the information is restricted to gross negligence. Version: 06/17

Murrelektronik Ltd. | Pendlebury Industrial Estate, Albion Street, Swinton | Manchester M27 4FG | Fon +44 161 72831-33 | Fax +44 161 72831-30 |
shop@murrelektronik.co.uk | shop.murrelektronik.co.uk