A 40-40 S

Adapter

4 mm | 30 V_{AC} / 60 V_{DC} | 32 A

- for adaption from Ø 4 mm system to Ø 4 mm safety system

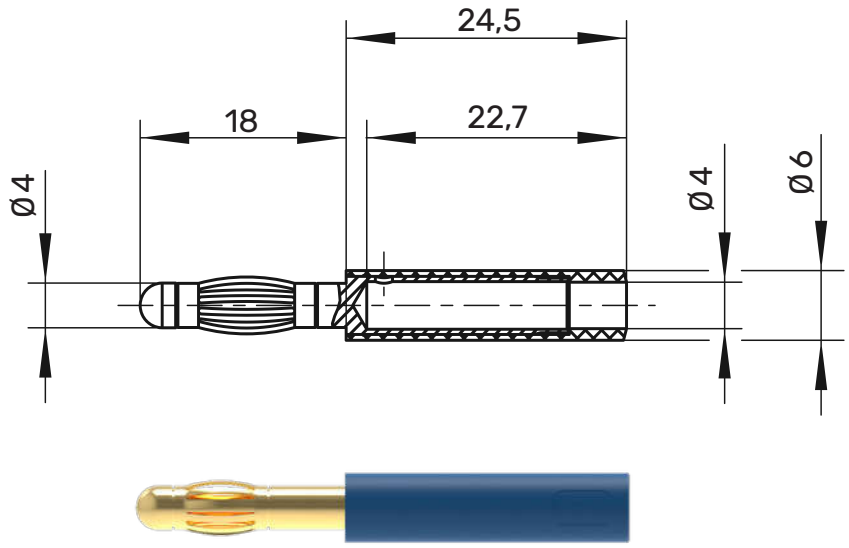

WH 020

General information

Order No. [1]	**A 40-40 S Ni | Au / ..(colour)**
colours	black, red, blue, yellow, green, grey, brown, white, purple
contact parts	nickel-plated | gold-plated
insulation	PA6.6 (UL94-V2)

Technical data

terminal	inline socket
transition resistance	6 mΩ (Ni) | 3 mΩ (Au)
rated voltage [2]	30 V_{AC} / 60 V_{DC}
rated current [2]	32 A
operating temperature	from -25 °C to +80 °C

[1] other contact platings, colours and designs on request
[2] at normal ambient temperatures

date: 13.04.2026

Artikelnummern
Article numbers

SCHÜTZINGER

A 40-40 S				Ni	Au
●	SW	Schwarz	Black	99000083	99000088
●	RT	Rot	Red	99000082	99000087
●	BL	Blau	Blue	99000079	99000084
●	GE	Gelb	Yellow	99000080	99000085
●	GN	Grün	Green	99000081	99000086
●	GR	Grau	Grey	99013278	
●	BR	Braun	Brown	99013277	
○	WS	Weiß	White	99013281	
●	VI	Violett	Purple	99013280	