ASCO™ Pulse Valves

Series
353

- The springless one-piece diaphragm pulse valves are especially designed for dust collector service applications, combining high flow, long life and extremely fast opening and closing to produce reliable and economical operation. The valves are selectable with integral or remote piloting.
- The high flow, angle type bodies, springless construction, in combination with the special diaphragm assemblies give the unique operating features required for dust collector service applications.
- Engineered to deliver a high-energy pulse of air while minimizing compressed air consumption. The valve delivers an average compressed air savings of 15%. Specific system savings can be calculated using this compressed air calculator. Series 353 Air Savings Calculator
- The design with patented Quick Mount Clamp connections eliminates the time consuming thread cutting and sealing resulting in maximum flexibility while the valve will be anchored to the pipes.
- Built-in silencers guarantee noise free operation and avoid foreign particles entering the valve.
- The integral operators are provided with epoxy moulded F-class coils. Various optional waterproof and explosionproof solenoids for use in potentially explosive atmospheres (gas & dust) according to Directive ATEX 2014/34/EU available.
- The valves satisfy all relevant EC directives.
- UL Recognized / CSA and RoHS compliant.

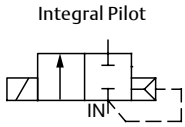



General Valve Information

Body	Aluminium	
Core tube, core spring, core and plugnut	Stainless Steel	
Shading coil	Copper	
Sealings and disc	NBR (Nitrile)	
Diaphragm	TPE / TPE-LT	
Temperature range	**TPE - Standard** **Ambient** -20°C to +85°C (-4°F to 185°F) **Medium** -20°C to +140°C (-4°F to 284°F)	**TPE - Low-Temp** **Ambient** -40°C to +60°C (-40°F to 140°F) **Medium** -40°C to +60°C (-40°F to 140°F)

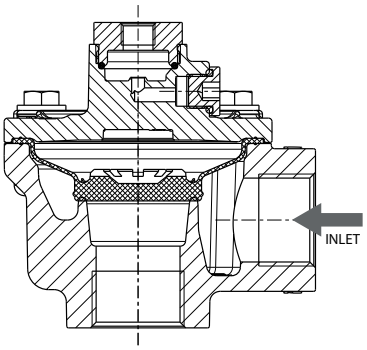

Threaded pipe connection

Electrical Characteristic (1)

Relative Duty Time	10%, max. on time 1 min.
Coil insulation class	F - 155°C (311°F)
Electrical enclosure protection	Moulded enclosure IP 65
Electrical interface	Spade plug (Cable Ø 6 - 8 mm (0.24 - 0.32 inches)) , DIN 46244
Electrical safety	IEC 335
Voltage	DC 24V; AC 24V/50-60Hz, 120/60 - 110/50V/Hz, 230V/50-60Hz

(1) More Information see pages 2 and 9 to 12

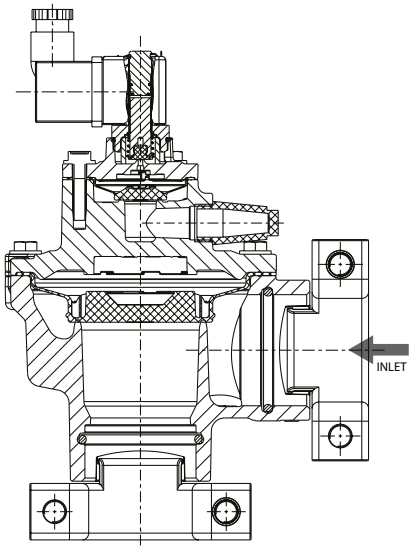

Quick Mount Clamp connection

TR000098ENUS-02_08-21
Availability, design and specifications are subject to change without notice. All rights reserved.

Specifications

Pipe Size (in)	Orifice Size mm (in)	Flow Factor Kv (m³/h)	Flow Factor Cv	Operating Pressure Differential bar (psi) Min	Operating Pressure Differential bar (psi) Max.	Coil Wattage (1) AC	Coil Wattage (1) DC	Connection Type	Catalog Number	Electrical Interface (2)	Options (3)	Voltage Code 24/50-60	Voltage Code 120/60, 110/50	Voltage Code 230/50-60	Voltage Code 24/DC	Voltage Code Remote	Dimension Type (4)
2-Way Normally Closed Aluminum Valve, TPE (One-Piece Diaphragm)																	**Drawing**
3/4"	32 (1-1/4")	13	15	2 (30)	8,5 (125)			NPT- Thread	8353K111...	0X (Remote Pilot)	A00					00	4
								G -Thread	G353K111...								4
								Clamp (NPT - Bonnet)	K353K111...		6AG						2
								Clamp (G - Bonnet)	K353K111...		A00						2
						6,3	22	NPT- Thread	8353K111...	S1 - DIN Coil (w/ connector)	A00	FQ	F0	FH	F1		3
								G -Thread	G353K111...								3
								Clamp	K353K111...								1
1"	32 (1-1/4")	20	23					NPT - Thread	8353K211...	0X (Remote Pilot)	A00					00	4
								G-Thread	G353K211...								4
								Clamp (NPT - Bonnet)	K353K211...		6AG						2
								Clamp (G - Bonnet)	K353K211...		A00						2
						6,3	22	NPT - Thread	8353K211...	S1 - DIN Coil (w/ connector)	A00	FQ	F0	FH	F1		3
								G -Thread	G353K211...								3
								Clamp	K353K211...								1
1 1/2"	55 (1-1/2")	49	57					NPT - Thread	8353K311...	0X (Remote Pilot)	A00					00	8
								G-Thread	G353K311...								8
								Clamp (NPT - Bonnet)	K353K311...		6AG						6
								Clamp (G - Bonnet)	K353K311...		A00						6
						6,3	22	NPT - Thread	8353K311...	S1 - DIN Coil (w/ connector)	A00	FQ	F0	FH	F1		7
								G -Thread	G353K311...								7
								Clamp	K353K311...								5

(1) Detailed technical information on the following page(s).
(2) Electrical operator types on the following page(s).
(3) More options for each construction type on the following page(s).
(4) Dimensions, see drawing(s) for each construction type on the following page(s).

Quick Mount Clamp Connection - Remote Pilot Valves

Pipe Size (in)	Connection Type	Catalog Number (Standard)	Catalog Number (Low-Temp)	Valve Details
3/4"	Clamp (NPT - Bonnet)	K353K1110X6AG00	K353K1120X6AG00	3/4", Clamp, Remote, NPT Bonnet
	Clamp (G - Bonnet)	K353K1110XA0000	K353K1120XA0000	3/4", Clamp, Remote, G Bonnet
1"	Clamp (NPT - Bonnet)	K353K2110X6AG00	K353K2120X6AG00	1", Clamp, Remote, NPT Bonnet
	Clamp (G - Bonnet)	K353K2110XA0000	K353K2120XA0000	1", Clamp, Remote, G Bonnet
1 1/2"	Clamp (NPT - Bonnet)	K353K3110X6AG00	K353K3120X6AG00	1 1/2", Clamp, Remote, NPT Bonnet
	Clamp (G - Bonnet)	K353K3110XA0000	K353K3120XA0000	1 1/2", Clamp, Remote, G Bonnet

How To Order

G 353 K 1 1 1 S0 A00 F1

Connection Type
G = ISO 228/1 "G" body connections
K = Quick Connect / Clamp (5)
8 = NPT inlet connection

Product Series
353 = Pulse Valves

Revision
K = Initial Release

Pipe Size
1 = 3/4"
2 = 1"
3 = 1 1/2"

Body Material
1 = Aluminium
3 = Aluminium Anodized

Temperature range / Sealing
1 = TPE Standard
(Ambient: -20°C (-4°F) to 85°C (185°F). Medium -20°C (-4°F) to 140°C (284°F)
2 = TPE Low-Temp
(Ambient: -40°C (-40°F) to 60°C (140°F). Medium -40°C (-40°F) to 140°C (284°F)

Voltage

00	=	All remote valves no voltage required
F1	=	24/DC Class F
F0	=	120/60,110/50 Class F
FQ	=	24V/50-60Hz Class F
FH	=	230/50-60 Class F

Other voltages on request

Options

A00	=	w/out option
6AG	=	NPT Bonnet (Must select when ordering Clamp (K) connection & Remote Pilot (0X) only)
A01	=	w/out silencer (only solenoid)
600	=	Fitting for Tube 6mm (remote only)
601	=	Fitting for Tube 8mm (remote only)
6AH	=	Clamp connection on inlet
9DQ	=	Inlet clamp connection only + fitting for tube 6mm (remote pilot + clamp only)
9DR	=	Inlet clamp connection only + fitting for tube 8mm (remote pilot + clamp only)
9DT	=	Inlet clamp connection only + without silencer (solenoid + clamp only)
9DU	=	Inlet clamp connection only + NPT bonnet and remote pilot connections (remote pilot + clamp connection only)

Further options on request

Electrical interface & explosion proof options

0X	=	All remote pilot valves no voltages required (6)
S0	=	Spade plug, 3x DIN 46244 without connector (equivalent to old SC prefix)(7)
S1	=	Spade plug, 3x DIN 46244, IP65 (equivalent to old SC prefix) (7)
SG	=	Moulded coil with connector, epoxy encapsulated, ATEX II 3GD Ex ec IIC Gc / II 3GD Ex tc IIIC Dc, zone 22 (equivalent to SG prefix) (7) (9) (9)
FN	=	Aluminium enclosure, 1/2 NPT conduit, IECEx/ATEX II 2G Ex db IIC Gb / II 2D Ex tb IIIC Db, zone 1-21 (equivalent to NF prefix) (7) (9) (9)
MV	=	= Steel enclosure, M20 cable gland, IECEx/ATEX II 2G Ex eb mb IIC Gb/II2D Ex tb IIIC Db, zone 1-21 (equivalent to EM prefix) (7) (9) (9)
A7	=	Moulded enclosure, epoxy encapsulated, integrated cable, IECEx/ATEX II 2G Ex mb IIC Gb / II 2D Ex mb IIIC Db, zone 1-21 (equivalent to PV prefix) (7) (9) (9)
X8	=	Water Proof Enclosure, Zink plated steel (epoxy coated), IP67 (equivalent to WP prefix) (7) (9)
H0	=	Moulded coil with leads, epoxy encapsulated, conduit hub 1/2" NPT zinc plated carbon steel NEMA Types 7 and 9, Class1&Div.2, UL/CSA (equivalent to EF prefix) (7) (9) (9)
...	=	**Other operators on request**

(5) Selecting G for Connection Type will also include G thread for the Remote Pilot Port and selecting 8 for Connection Type will include NPT thread for the Remote Pilot Port. To select the thread type on the Remote Pilot Port for the Clamp Connections, please choose the appropriate Option in digits 11-13 (i.e. 6AG for NPT thread).
(6) NON-ATEX VERSIONS 353-SERIES USABLE IN ATEX ZONES
This product category does not require certification. There is no potential ignition risk to the products themselves. These product categories are named simple mechanical products. These products can be used in specific explosion zones 1 and 21 in compliance with our installation instructions. Pulse Valves and their accessories are capable for use in explosive atmospheres in the form of gas, steam, mists and dust.
(7) Dimensions on page 10 to 12 to find.
(8) Search prefix in **www.emerson.com/asco** to get detailed technical information. Please note that the valve pressure ratings with some of the ATEX enclosures will be reduced.
To obtain the correct pressure rating please check the landing pages of the "2-Way Solenoid Pulse Valve Configurator".
(9) Coils class F only.

TR000098ENUS-02_08-21

Dimensions: mm (inches)

Version with Quick Mount Clamp connection

Fig.1: Integral pilot operated

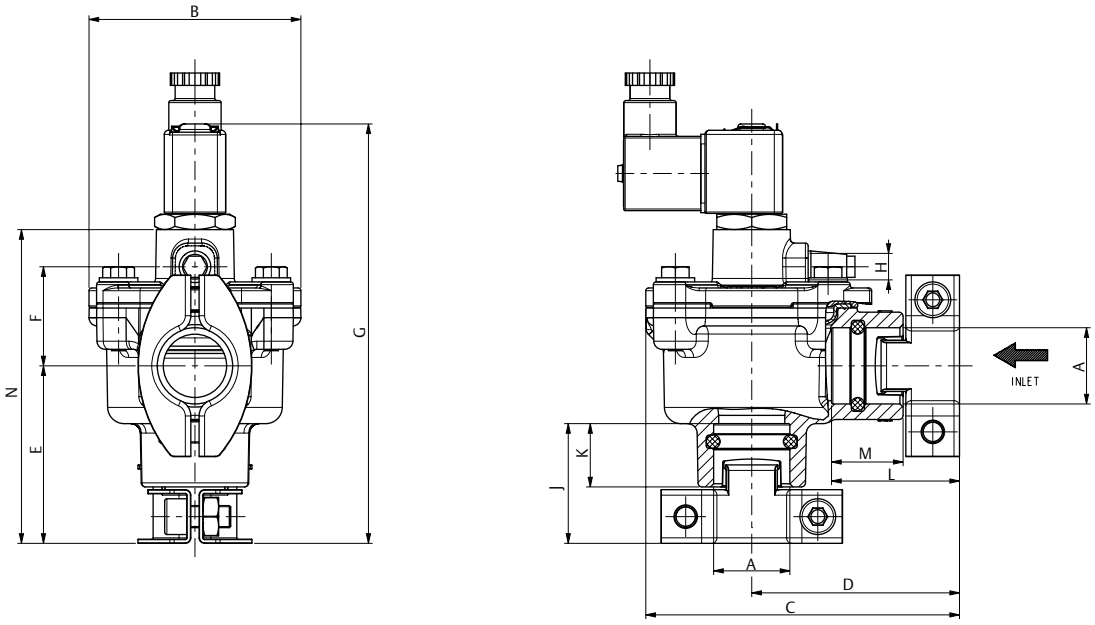

Fig.2: Remote pilot operated

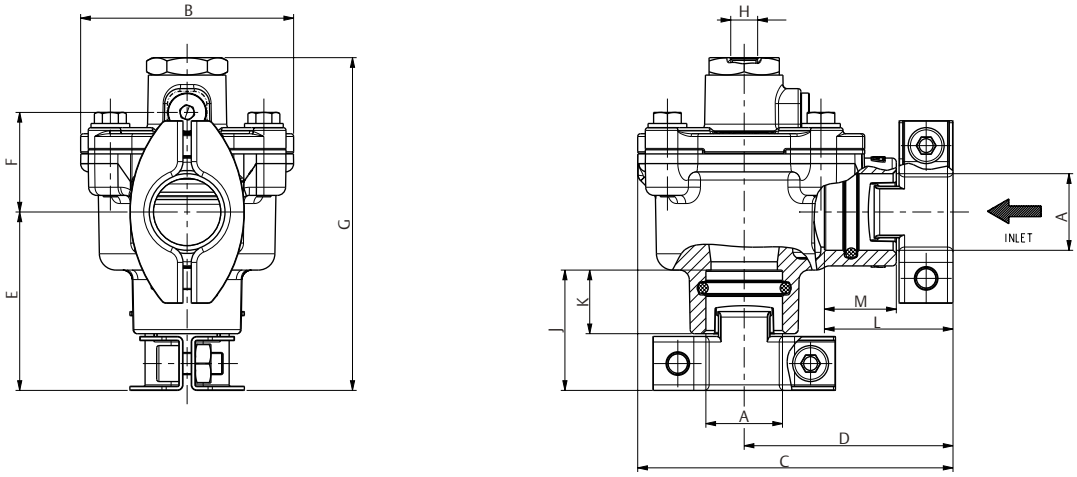

Fig.	A	B	C	D	E	F	G	H	J	K	L	M	N	Weight kg (lbs)
1	G 3/4" NPT 3/4"	77 (3.032)	114 (4.488)	76 (2.992)	65 (2.559)	36 (1.417)	152 (5.984)	G1/8" NPT 1/8"	43.5 (1.713)	23 (0.906)	46.5 (1.831)	26 (1.024)	114 (4.488)	0.76 (1.68)
	G 1" NPT 1"	77 (3.032)	120 (4.724)	82 (3.228)	71 (2.795)	40 (1.575)	162 (6.378)	G1/8" NPT 1/8"	44.5 (1.752)	23 (0.906)	44.5 (1.752)	23 (0.906)	124 (4.882)	0.90 (1.98)
2	3/4" NPT 3/4"	77 (3.032)	114 (4.488)	75.5 (2.972)	64.5 (2.539)	36 (1.417)	120.5 (4.744)	G1/8" NPT 1/8"	43.5 (1.713)	23 (0.906)	46.5 (1.831)	26 (1.024)	-	0.66 (1.46)
	G 1" NPT 1"	77 (3.032)	120 (4.724)	81.5 (3.209)	70.5 (2.776)	40 (1.575)	130.5 (5.138)	G1/8" NPT 1/8"	44.5 (1.752)	23 (0.906)	44.5 (1.752)	23 (0.906)	-	0.80 (1.76)

Dimensions: mm (inches)

Version with threaded pipe connection

Fig.3: Integral pilot operated

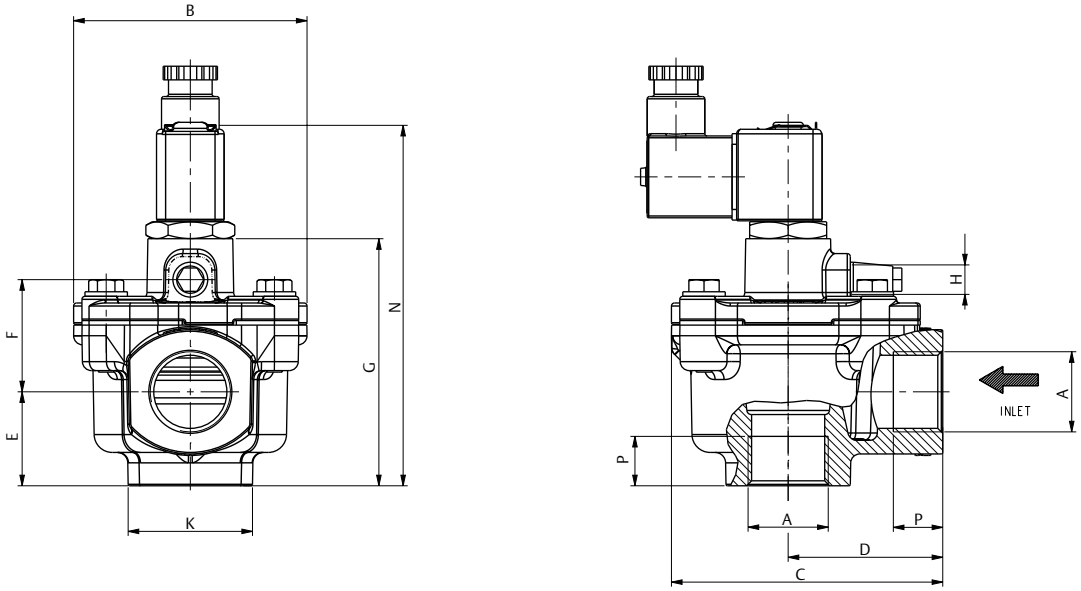

Fig.4: Remote pilot operated

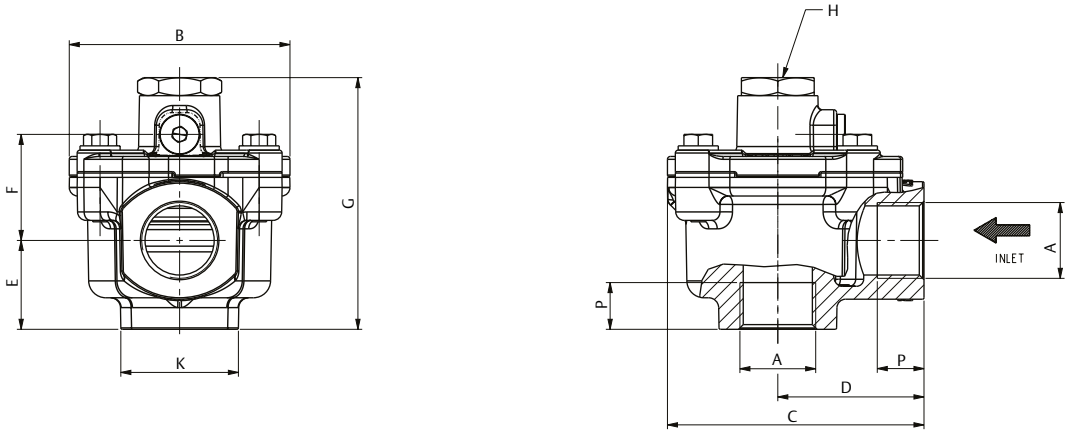

Fig.	A	B	C	D	E	F	G	H	K	N	P	Weight kg (lbs)
3	G 3/4" NPT 3/4"	77 (3.032)	90 (3.543)	51 (2.008)	31 (1.221)	37 (1.457)	81.5 (3.209)	G 1/8" NPT 1/8"	41 (1.614)	119 (4.685)	16 (0.630)	0.57 (1.26)
	G 1" NPT 1"	77 (3.032)	90 (3.543)	51 (2.008)	31 (1.221)	37 (1.457)	81.5 (3.209)	G 1/8" NPT 1/8"	41 (1.614)	119 (4.685)	16 (0.630)	0.53 (1.17)
4	G 3/4" NPT 3/4"	77 (3.032)	89.5 (3.524)	51 (2.008)	31 (1.221)	37 (1.457)	88 (3.465)	G 1/8" NPT 1/8"	41 (1.614)	-	16 (0.630)	0.47 (1.04)
	G 1" NPT 1"	77 (3.032)	89.5 (3.524)	51 (2.008)	31 (1.221)	37 (1.457)	88 (3.465)	G 1/8" NPT 1/8"	41 (1.614)	-	16 (0.630)	0.44 (0.97)

TR000098ENUS-02_08-21

Dimensions: mm (inches)

Version with Quick Mount Clamp connection

Fig.5: 1 1/2" Integral pilot operated

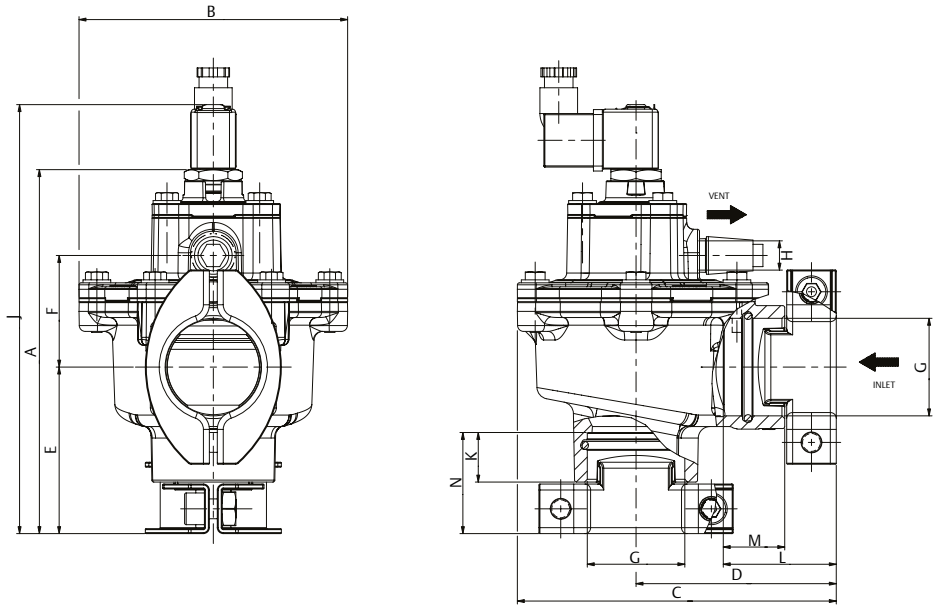

Fig.6: 1 1/2" Remote pilot operated

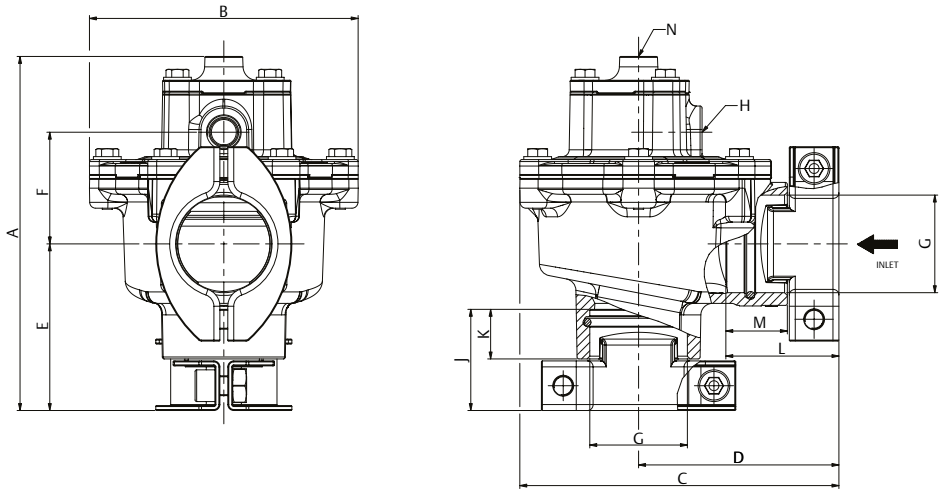

Fig.	A	B	C	D	E	F	G	H	J	K	L	M	N	Weight kg (lbs)
5	183.6 (7.228)	135.5 (5.335)	161 (6.339)	101 (3.976)	84 (3.307)	56.3 (2.217)	1 1/2"	G3/8"	216 (8.504)	25 (0.984)	57 (2.244)	31 (1.220)	51 (5.008)	1.78 (3.92)
6	178.5 (7.028)	135.5 (5.335)	161 (6.339)	101 (3.976)	84 (3.307)	56.5 (2.224)	1 1/2"	G3/8"	51 (2.008)	25 (0.984)	57 (5.244)	31 (1.220)	G 1/4"	1.68 (3.70)

TR000098ENUS-02_08-21

Dimensions: mm (inches)

Version with threaded pipe connection

Fig.7: 1 1/2" Integral pilot operated

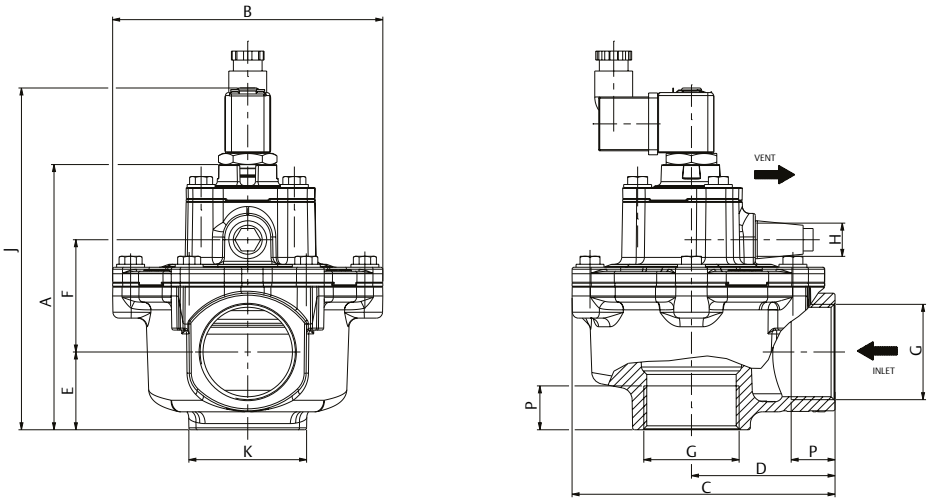

Fig.8: 1 1/2" Remote pilot operated

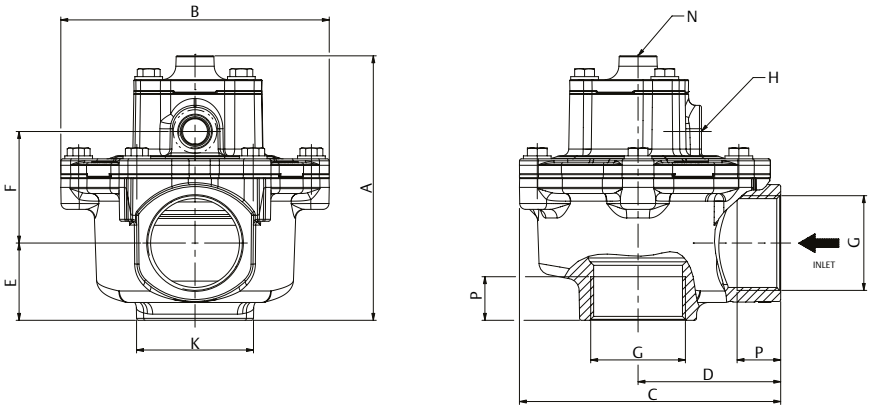

Fig.	A	B	C	D	E	F	G	H	J	K	N	P	Weight kg (lbs)
7	133 (5.236)	135.5 (5.335)	132 (5.197)	72 (2.835)	39 (1.535)	56.5 (2.224)	1 1/2"	G 3/8"	171 (6.732)	-	59 (2.323)	22 (0.867)	1.24 (2.73)
8	133.5 (5.256)	135.5 (5.335)	132 (5.197)	72 (2.835)	39 (1.535)	56.5 (2.224)	1 1/2"	G 3/8"	-	59 (2.323)	G 1/4"	22 (0.867)	1.14 (2.51)

TR000098ENUS-02_08-21

Special designs and accessories

- ASCO Series E909 sequential controller to pilot valve Series 262 / 257.
- ASCO Series 110 / 125 pilot boxes containing 2 to 12 pilot solenoid valves
- The springless one-piece diaphragm pulse valves and the pilot valves can be equipped with explosion-proof solenoids in accordance with ATEX directives and national standards.
- Waterproof enclosure with embedded screw terminal coil according to CEE 10 (IP67)
- Further versions on request.

Installation

- The package consists of a pulse valve, solenoid (pre-assembled) and connector (supplied loose).
- The pulse valves can be mounted in any position without affecting operation.
- Threaded connections G (ISO 228/1), NPT, or patented Quick Mount Clamp connection.
- Installations with pipe lengths of more than 3 meters (9.8 feet) must be tested under operating conditions.
- Pipe diameters of 6 mm (0.24 inches) are recommended for all installations.
- In the patented Quick Mount Clamp connection tightness is achieved by the o-ring sealing on the pipes (3/4" = 26.4mm (1.0") to 27.4mm (1.1"); 1" = 33.2mm (1.3") to 34.2mm (1.4") and 1 1/2" = 47.8mm (1.88") to 48.8mm (1.92")) according to ISO 4200.
- Installation and maintenance instructions are included with each valve.
- Declarations of conformity are available on request.
- Version Ex e mb with prefix "EM / WSEM" Magnet housings have a cable gland with internal strain relief for cables with an outside diameter of 7 to 12 mm and the housing is equipped with an internal and external connection option for an earthing or equipotential bonding conductor.
- The Ex d enclosure with prefix "NF/WSNF" is equipped with a cable entry with 1/2" NPT thread - M20 x 1.5 (prefix "ET") is optionally available. The housings are supplied without cable gland.

Remote Pilot

- When connecting the piping to the G or NPT 1/8" connection in the valve bonnet, the external ASCO™ pilot valve must be mounted as close as possible to the main pulse valve. Piping lengths of up to 3 meters (9.8 feet) have only a minor influence on the pulse time.

Explanations of temperatures

Valve temperature range	The temperature range for the pulse valve is determined by selecting the diaphragm (TPE or TPE-LT).
Operator ambient temperature range	The ambient temperature range for the operator is determined by the selected power level and type of protection.
Total temperature range	The temperature range of the entire pulse valve is determined by the limits of the two temperature ranges listed above.
Medium temperature range	Temperature range with the TPE standard diaphragm is -20°C (-4°F) to 140°C (284°F). Temperature range with the TPE low-temp diaphragm is -40°C (-40°F) to 60°C (140°F)

Rebuild Kits [1]

Remote Pilot				
Pipe Size (in)	Base Catalog 353	Diaphragm Kit (1pc)	Diaphragm Kit (10 pcs)	Clamp Kit (1x)
TPE Standard				
3/4"	353K111	M200697	M200699	M200701
1"	353K211			M200702
1 1/2"	353K311	M200755	M200756	M200761
TPE Low-Temp				
3/4"	353K112	M200698	M200700	M200701
1"	353K212			M200702
1 1/2"	353K312	M200757	M200758	M200761

Integral Pilot					
Pipe Size (in)	Base Catalog 353	Spare Parts Kit	Diaphragm Kit (1pc)	Diaphragm Kit (10 pcs)	Clamp Kit (1x)
TPE Standard					
3/4"	353K111	M200695	M200697	M200699	M200701
1"	353K211				M200702
1 1/2"	353K311	M200759	M200755	M200756	M200761
TPE Low-Temp					
3/4"	353K112	M200696	M200698	M200700	M200701
1"	353K212				M200702
1 1/2"	353K312	M200760	M200757	M200758	M200761

(1) See installation and maintenace instruction for detailed information.

Electrical characteristics

Coil insulation class F
Electrical safety IEC 335
Voltages DC (=) 24 V, permissible voltage tolerance ± 10%
AC (~) 24V / 50-60Hz, 120/60 - 110/50V/Hz, 230V / 50-60Hz (other voltages on request)

Pilot operated (1)	Max. power AC ~	Max. power DC =	Operator ambient temperature °C (°F) (2)	Safety code	Electrical enclosure protection (EN 60529)	Replacement coil / Spare parts kit ~ 24V/50-60 Hz	~ 230V/50/60 Hz	~ 120/60-110/50 Hz	= 24 V/DC	Type (3)
Basic Power										
S1, S0	6.3	22	-40 to +75 (-40 to +167)	EN 60730	IP65, moulded	400129-502	400129-528	400127-225	400127-642	01
SG	6.3	22	-10 to +60 (-14 to +140)	II3 GD Ex ec IIC T6-T4 Gc, Ex tc IIIC T110°C Dc	IP65X, moulded	M2004090SGA00**FQ**	M2004090SGA00**FH**	M2004090SGA00**F0**	M2004090SGA00**F1**	02
WP/WS	10.5	19.7	-40 to +75 (-40 to +167)	EN 60730	IP67, Steel/Stainl.St.	400909-101	400909-117	400909-118	400405-342	03
NF/WSNF	16.7	19.7	-60 to +40/60 (-76 to +104/140)	II2GD Ex db IIC Gb T4 Ex tb IIIC T135°C Db	IP66/67, Alu./Stainl.St.	400405-201	400405-217	400405-225	400405-342	04
EM/WSEM	10.5	16.8	-40 to +40 (-40 to +104)	II2GD Ex e mb IIC Gb T3 Ex tb IIIC T200°C Db	IP66/67, Steel/Stainl.St.	400909-101	400909-117	400909-118	400911-142	03
PV	6.3	22	-40 to +40/65 (-40 to +104/149)	II2GD Ex mb IIC Gb T4 Ex tc IIIC T135°C Db	IP65, moulded	-	-	-	-	05
EF/EV	10.1	11.6	-60 to +40/52 (-76 to +104/125)	NEMA Type 7 and 9	NEMA 4x	On request	On request	On request	On request	06

(1) Electrical interface as described in the order code. Other versions are available on request.
(2) Temperature range can be limited by sealings.
(3) Refer to the dimensional drawings below.

Electrical Connections

Electrical Interface	Connection
SG, S1	Cable gland connector EN175301-803A (ISO 4400) for cables with an O.D. from 6 to 10 mm (0.24 to 0.39 inches).
WP, WS, EM, WSEM	M20-Synthetics cable gland for cables with an O.D. from 7 to 12 mm.
NF, WSNF	Threaded conduit 1/2" NPT supplied without cable gland.
NFET, WSNFET	Cable entry with thread M20 x 1.5 are supplied without calbe gland
PV	Epoxy Coil with integrated cable, 2m (6'5") long (other lengths on request)
EF, EV	Epoxy Coil with integrated 1/2" NPT conduit and 35cm (13.8") long

Dimensions: mm (inch)



Type 01

"S1", "S0" Solenoid
with spade plug connector size 22 - 11mm (0.43 inches)
EN 175301-803 Industry standard form B / IP65

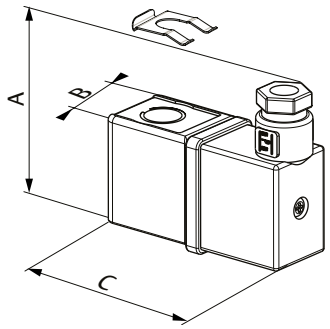

A	B	C	Weight kg (lbs)
49 (1.929)	22 (0.866)	61 (2.401)	0.08 (0.18)



Type 02

"SG" Solenoid
with spade plug connector size 22- 11mm (0.43 inches)
EN 175301-803 Industry standard form B / IP65
II 3G Ex ec IIC T4 Gc, II 3D Ex tc IIIC T110°C Dc IP65X

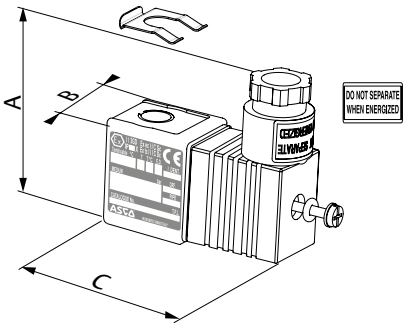

A	B	C	Weight kg (lbs)
49 (1.929)	22 (0.866)	61 (2.401)	0.08 (0.18)

Dimensions: mm (inch)



Type 03 (1)

Prefix "EM", "WSEM" solenoids / Electrical interface MV/MW/MT/MS/MN/MU
Pull-type solenoid operator
Metal enclosure, epoxy coated or stainless steel
EN-IEC 60079-7, EN-IEC 60079-18 and EN-IEC 60079-31
II 2G Ex e mb IIC Gb, II 2D Ex tb IIIC Db IP66/67

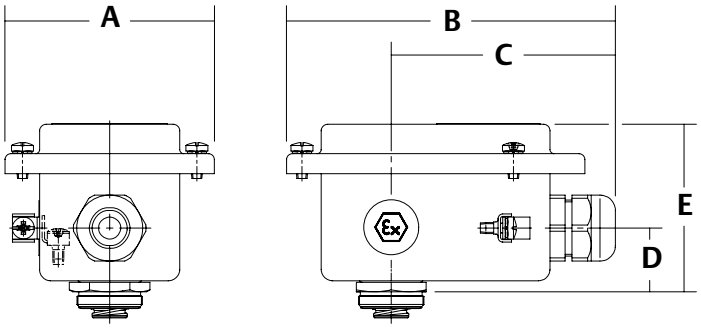

series/size	A	B	C	D	E	weight kg (lbs)
EM/WSEM-MXX	77 (0.031)	120 (4.724)	82 (3.228)	23 (0.906)	62 (2.441)	0.55 (1.21)

(1) Prefix "WP", "WS" solenoids / Electrical interface X8/X9 Pull-type solenoid operator Metal enclosure, epoxy coated or stainless steel IP66/67

Dimensions: mm (inch)



Type 04

Prefix "NF" , "WSNF" Solenoid / Electrical interface FN/FS/FT/FU
Aluminium, stainless steel
(NF, epoxy coated)
EN-IEC 60079-1 and EN-IEC 60079-31
II 2G Ex d IIC T6..T4 Gb, II 2D Ex tb IIIC 85°C..135°C Db IP66/67

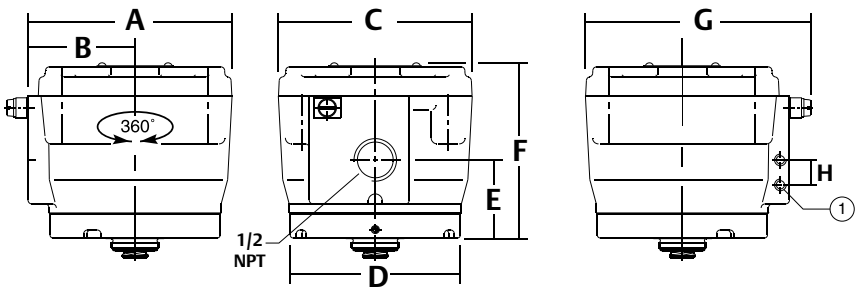

Mounting Bracket

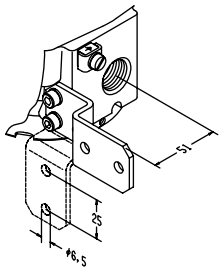

Bracket kit no. **C139824**
contains: Stainless steel 304 SS screws and bracket

size	A	B	C	D	E	F	G	H	weight (1)
NF	102 (4.016)	54 (2.126)	97 (3.818)	86 (3.386)	39 (1.535)	89 (3.504)	115 (4.528)	15 (0.591)	1.4 (3.1)
WSNF	102 (4.016)	54 (2.126)	97 (3.818)	86 (3.386)	39 (1.535)	89 (3.504)	115 (4.528)	15 (0.591)	2.7 (5.9)

(1) 2 mounting holes M5, depth 9 mm

Dimensions: mm (inch)



Type 05

Prefix "PV" solenoids / Electrical interface A7
Epoxy coated
EN-IEC 60079-18
II 2G Ex mb IIC Gb - II 2D Ex mb IIIC Db IP67

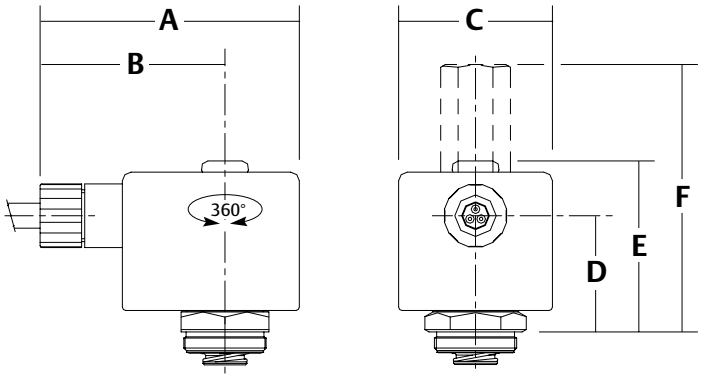

size	A	B	C	D	E	F	weight (1)
EM5	60 (2.362)	45 (1.772)	29 (1.142)	21 (0.827)	38.5 (1.516)	66 (2.598)	0.113 (0.249)

Dimensions: mm (inch)



Type 06

"EF", "EV" Solenoid
Epoxy encapsulated
NEMA type 7, 9 / ICS-6 ANSI

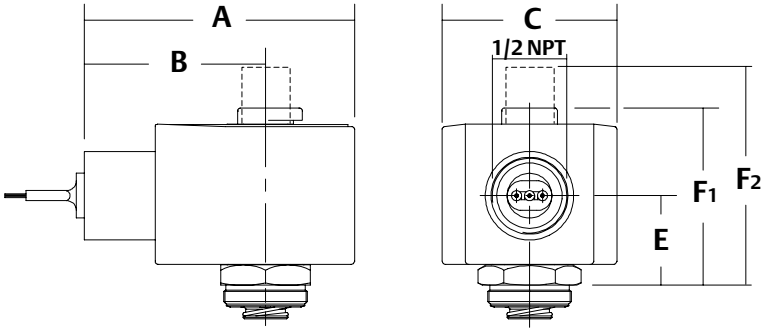

A	B	C	Weight kg (lbs)
49 (1.929)	22 (0.866)	61 (2.401)	0,08 (0.18)