Distribution Unit with 1 IEC Appliance Inlet C14 and 4 Appliance Outlets F



Minibloc 4747

F
70° C

C14
70° C

See below:
Approvals and Compliances

Description
- Stand alone module
- 1 Function :
  of 4 outlets , Pin temperature 70 °C , Protection class I

Characteristics
- Suitable for use in equipment according to IEC/UL 62368-1

Weblinks
pdf data sheet, html datasheet, General Product Information, Approvals, Distributor-Stock-Check, Accessories, Detailed request for product

Technical Data

Ratings IEC	10 A / 250 VAC; 50 Hz
Ratings UL/CSA	15 A / 250 VAC; 60 Hz
Dielectric Strength	> 2 kVAC between L-N > 2 kVAC between L/N-PE (1 min/50 Hz)
Allowable Operation Temperature	-25 °C to 70 °C
Protection against electric shock	Suitable for appliances with protection class I acc. to IEC 61140
Material: Housing	Thermoplastic, black, UL 94V-0

Appliance inlet/-outlet	C14 acc. to IEC 60320-1, / F acc. to IEC 60320-3 UL 60320-1 CSA C22.2 no. 60320-1 (for cold conditions) pin-temperature 70 °C, 10 A, Protection Class I

Approvals and Compliances

Detailed information on product approvals, code requirements, usage instructions and detailed test conditions can be looked up in Details about Approvals

SCHURTER products are designed for use in industrial environments. They have approvals from independent testing bodies according to national and international standards. Products with specific characteristics and requirements such as required in the automotive sector according to IATF 16949, medical technology according to ISO 13485 or in the aerospace industry can be offered exclusively with customer-specific, individual agreements by SCHURTER.

Approvals

The approval mark is used by the testing authorities to certify compliance with the safety requirements placed on electronic products.

Approval Reference Type: 4747

Approval Logo	Certificates	Certification Body	Description
c UL us	UL Approvals	UL	UL File Number: E103791
	CCC Approvals	CCC	CCC Certificate Number: 2011010204456404

Product standards

Product standards that are referenced

Organization	Design	Standard	Description
IEC	Designed according to	IEC 60320-1	Appliance couplers for household and similar general purposes
IEC	Designed according to	IEC 60320-3	Appliance couplers for household and similar general purposes
UL	Designed according to	UL 60320-1	Standard for Attachment Plugs and Receptacles
CSA Group	Designed according to	CSA C22.2 no. 60320-1	General Use Receptacles, Attachment Plugs, and Similar Wiring Devices

Application standards

Application standards where the product can be used

Organization	Design	Standard	Description
IEC	Designed for applications acc.	IEC/UL 62368-1	Audio/video, information and communication technology equipment - Part 1: Safety requirements

Compliances

The product complies with following Guide Lines

Identification	Details	Initiator	Description
CE	CE declaration of conformity	SCHURTER AG	The CE marking declares that the product complies with the applicable requirements laid down in the harmonisation of Community legislation on its affixing in accordance with EU Regulation 765/2008.
UKCA	UKCA declaration of conformity	SCHURTER AG	The UKCA marking declares that the product complies with the applicable requirements laid down in the British Amendment of Regulation (EC) 765/2008.
RoHS COMPLIANT	RoHS	SCHURTER AG	Directive RoHS 2011/65/EU, Amendment (EU) 2015/863
	China RoHS	SCHURTER AG	The law SJ / T 11363-2006 (China RoHS) has been in force since 1 March 2007. It is similar to the EU directive RoHS.
REACH	REACH	SCHURTER AG	On 1 June 2007, Regulation (EC) No 1907/2006 on the Registration, Evaluation, Authorization and Restriction of Chemicals 1 (abbreviated as "REACH") entered into force.

Dimensions [mm]

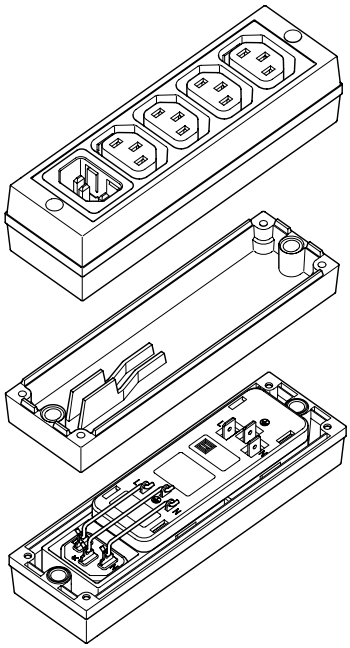

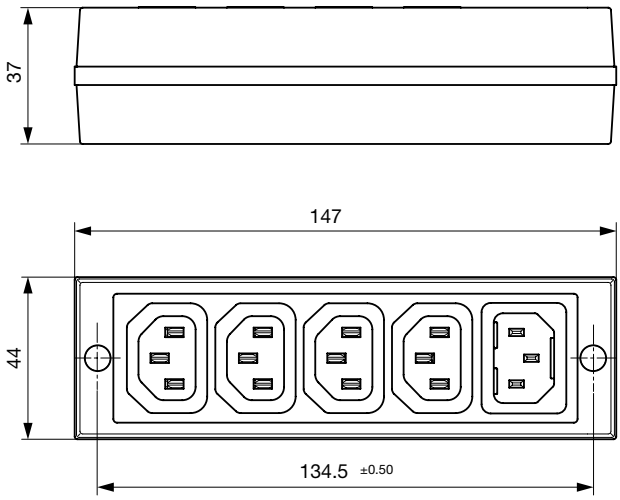

Mounting holes for 3 mm screws

All Variants

Terminal	Version with	Order Number
-	inlet	4747.0000

Most Popular.

Availability for all products can be searched real-time:https://www.schurter.com/en/Stock-Check/Stock-Check-SCHURTER

Packaging unit 30 Pcs

Mating Inlets/Plugs



Category / Description

Plug Overview complete

4732, Mounting: Power Cord, Plug: IEC E, Cable	4732
4735, Mounting: Power Cord, Plug: IEC E, Cable	4735
9009, Mounting: Plug: IEC E, Screw clamps	9009
4733, Mounting: Power Cord, Plug: IEC E, Cable	4733
4736, Mounting: Power Cord, Plug: IEC E, Cable	4736
	...

Mating Outlets/Connectors



Appliance Outlet Overview complete

4787, Mounting: Screw-on mounting, Appliance Outlet: IEC Solder terminals, 10 A, Suitable for appliances with protection class I	4787
4788, Mounting: Snap-in version, Appliance Outlet: IEC Solder / Quick Connect, 10 A, Suitable for appliances with protection class I	4788
IEC Appliance Outlet F or H, Screw-on Mounting, Front Side, Solder, PCB or Quick-connect Terminal	5091



Connector Overview complete

4782 Mounting: Power Cord, 3 x 1 mm² / 3 x 18 AWG, Cable, Connector: IEC C13	4782
4785 Mounting: Power Cord, 3 x 1 mm² / 3 x 18 AWG, Cable, Connector: IEC C13	4785
4300-06 Mounting: Power Cord, 3 x 1 mm² / 3 x 18 AWG, Cable, Connector: IEC C13	4300-06
4781 Mounting: Power Cord, Cable, Connector: IEC C15	4781
4784 Mounting: Power Cord, 3 x 1 mm² / 3 x 18 AWG, Cable, Connector: IEC C15	4784
	...

The specifications, descriptions and illustrations indicated in this document are based on current information. All content is subject to modifications and amendments. Information furnished is believed to be accurate and reliable. However, users should independently evaluate the suitability and test each product selected for their own applications.