HP

10 mm x 38 mm panel mount fuse holder



Agency information

c UL us

Environmental compliance

RoHS

Ordering part number

BK1-HPS-611E

- Packaging prefix
- Family name
- Type

Product features

- For 10 mm x 38 mm fuse
- Panel mount fuse holder
- 600 Vac rating and up to 30 A

Packaging prefix

- BK1- (1000 parts per case pack)

Specifications

Part number	Voltage rating (Vac)	Current rating (A)	Body material	Contact/clip material	Agency
BK1-HPS-611E	600	30	Bakelite, UL 94V-0, black	Clip: copper alloy, nickel plated Terminals: brass, tin plated Spring: steel	cURus
BK1-HPG-615E	600	30	Bakelite, UL 94V-0, black	Clip: copper alloy, nickel plated Terminals: brass, tin plated Spring: steel	cURus

Dimensions- mm

HPS-611E

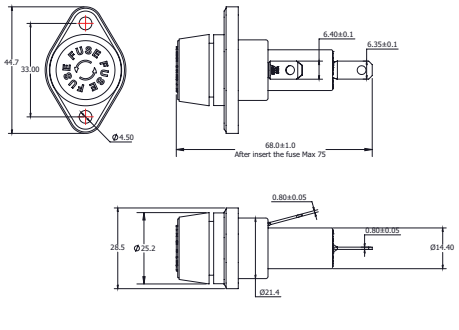

HPG-615E

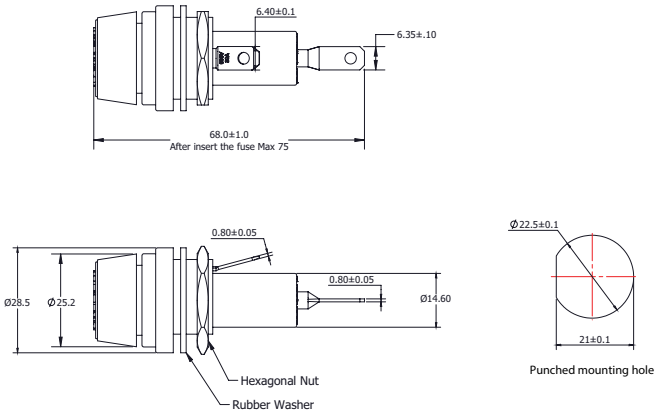

Life Support Policy: Eaton does not authorize the use of any of its products for use in life support devices or systems without the express written approval of an officer of the Company. Life support systems are devices which support or sustain life, and whose failure to perform, when properly used in accordance with instructions for use provided in the labeling, can be reasonably expected to result in significant injury to the user.

Eaton reserves the right, without notice, to change design or construction of any products and to discontinue or limit distribution of any products. Eaton also reserves the right to change or update, without notice, any technical information contained in this bulletin.

Eaton
Electronics Division
1000 Eaton Boulevard
Cleveland, OH 44122
United States
Eaton.com/electronics

© 2021 Eaton
All Rights Reserved
Printed in USA
Publication No. ELX1021 BU-ELX21022
February 2021

Eaton is a registered trademark.

All other trademarks are property of their respective owners.

Follow us on social media to get the latest product and support information.