8041

MAN 1000083983 EN Version: - Status: RL (released | freigegeben) printed: 14.08.2008

INSERTION MAGMETER FOR HIGH TEMPERATURES



Instruction Manual

bürkert
Fluid Control Systems

© Bürkert 2004 Subject to technical change without notice

Table of Contents

ENGLISH

MAN 1000083983 EN Version: I Status: RL (released | freigegeben) printed: 14.08.2008

1. INTRODUCTION 3
1.1 Symbol used 3
1.2 General safety instructions 3
1.3 Description 4
1.4 Conversion of the flow velocity into a flow rate - Factor K 4
2. QUICK START 6
3. CONFIGURATION 8
3.1 General comments 8
3.2 Defining the mains frequency 11
3.3 Filtering level 11
3.4 “Zero flow” point calibration 12
3.5 Measuring range selection or full scale teach-in 13
3.5.1 Selection of a predefined measuring range 13
3.5.2 Full scale teach-in 14
3.6 Programming the relay output 15
3.6.1 Switching mode of the relay output 16
3.6.2 Programming the low switching threshold 18
3.6.3 Programming the high switching threshold 19
3.6.4 Programming the time-out before switching 20
4. INSTALLATION 21
4.1 Installation guidelines 21
4.1.1 Pressure-Temperature diagram 21
4.1.2 Mounting positions 22
4.2 Installation 24
4.3 General electrical connection 24
4.4 Electrical wiring 26
4.4.1 Connection of the 4-20 mA current output 27
4.4.2 Connection of the frequency output 28
4.4.3 Connection of the relay output 29
5. MAINTENANCE 30
5.1 Error signalling 30
5.2 Cleaning 31
6. TECHNICAL DATA 32
6.1 Process characteristics 32
6.2 Electrical characteristics 32
6.3 Safety 33
6.4 Environment 33
6.5 Conformity with standards 33
6.6 Dimensions 34
6.7 Label description 34
7. ANNEX 35
7.1 Order codes 35
7.1.1 Finished products 35
7.1.2 Accessories and spare parts 35
7.2 Flow charts 36
7.3 Connection examples 38

MAN 1000083983 EN Version: - Status: RL (released | freigegeben) printed: 14.08.2008

1.1 SYMBOL USED

Indicates information which must be followed. Failure to follow the information could endanger the user and affect the function of the device.

1.2 GENERAL SAFETY INSTRUCTIONS

Before installing or using this product, please read this manual and any other relevant documentation to ensure you fully benefit from all the advantages the product can offer.

- Please verify that the product is complete and free from any damage.
- It is the customer's responsibility to select an appropriate device for the application, ensure the unit is installed correctly, and maintain all components.
- Always check the chemical compatibility of the materials the device is made of.
- This product should only be installed or repaired according to the standards and rules in force in the country, by specialist staff using the correct tools.
- Please observe the relevant safety regulations throughout the operation, maintenance and repair of the product.
- Always ensure that the power supply is switched off and the pipes / tank do not contain any pressure before working on the device / system.
- If these instructions are ignored or the transmitter is not used according to the specifications, no liability will be accepted and the guarantee on the device and accessories will become invalid.
- This electronic device is sensitive to electrostatic discharge. To avoid any damage by immediate electrostatic discharge, pay attention to the requirements of EN 100 015-1.
- Always protect the device from electromagnetic perturbations, and when installed outside, protect it from the rain and ultraviolet radiations.

Manufacturer's address

Bürkert & Cie
Rue du Giessen
67220 TRIEMBACH-au-VAL
FRANCE

MAN 1000083983 EN Version: - Status: RL (released | freeze) printed: 14.08.2008

1.3 DESCRIPTION

The 8041 is a magmeter measuring a flow velocity and made up of an electronic module and a stainless steel sensor. It is fitted with a 4-20 mA current output, a pulse rate output and a relay output.

The flow velocity is visualized by a 10-led bargraph located on the electronic board.

The following parameters can be programmed by means of 5 switches, a push-button and a 10-led bargraph:

- "zero flow" point
- measuring full scale
- relay output parameters
- frequency delivered by the mains
- filtering of the flow velocity measurements

1.4 CONVERSION OF THE FLOW VELOCITY INTO A FLOW RATE - FACTOR K

The 8041 measures the flow velocity (in m/s) of the medium and converts it into a current (in mA) and a frequency rating (in Hz).

The current I or the frequency f are proportional to the flow rate Q (l/s); The proportionality factor is called "factor K":

$$f = K_1.Q$$
$$I = K_2.Q + 4$$

The following formulae make it possible to calculate the K factor which is necessary to convert the flow velocity, i.e. current or frequency value, into a flow rate:

Full scale	Factor K_1	Factor K_2
10 m/s	$K_1 = \frac{100}{K\,fitting}$	$K_2 = \frac{20}{3 \times K\,fitting}$
5 m/s	$K_1 = \frac{200}{K\,fitting}$	$K_2 = \frac{40}{3 \times K\,fitting}$
2 m/s	$K_1 = \frac{500}{K\,fitting}$	$K_2 = \frac{100}{3 \times K\,fitting}$

$K_{fitting}$ = K factor of the fitting S020 (to be taken from the instruction manual of the S020 fitting: use the K factor of the S020 associated to a transmitter 8045

MAN 1000083983 EN Version: - Status: RL (released | freigegeben) printed: 14.08.2008

Example

Be a 8041 inserted into an S020, with DN50 and made of stainless steel:

$$K_{fitting} = 11,24$$

The selected full scale is 5 m/s.

The factor K_1 to be used for the conversion of the output frequency f into a flow rate Q is:

$$K_1 = \frac{200}{11,24} = 17,79$$

The factor K_1 to be used for the conversion of the output current I into a flow rate Q is:

$$K_2 = \frac{40}{3x11,24} = 1,19$$

MAN 1000083983 EN Version: - Status: RL (released | freigegeben) printed: 14.08.2008

This Quick Start diagram shows the different installation and programming steps to be carried out to ensure the good operation of the appliance.

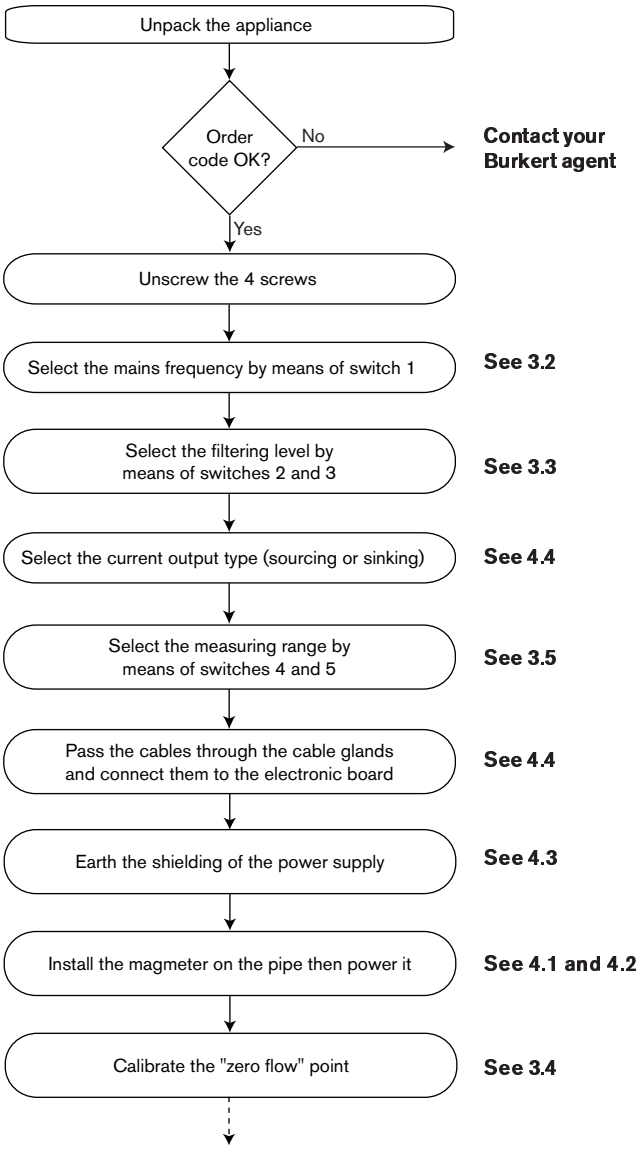

MAN 1000083983 EN Version: - Status: RL (released | freigegeben) printed: 14.08.2008

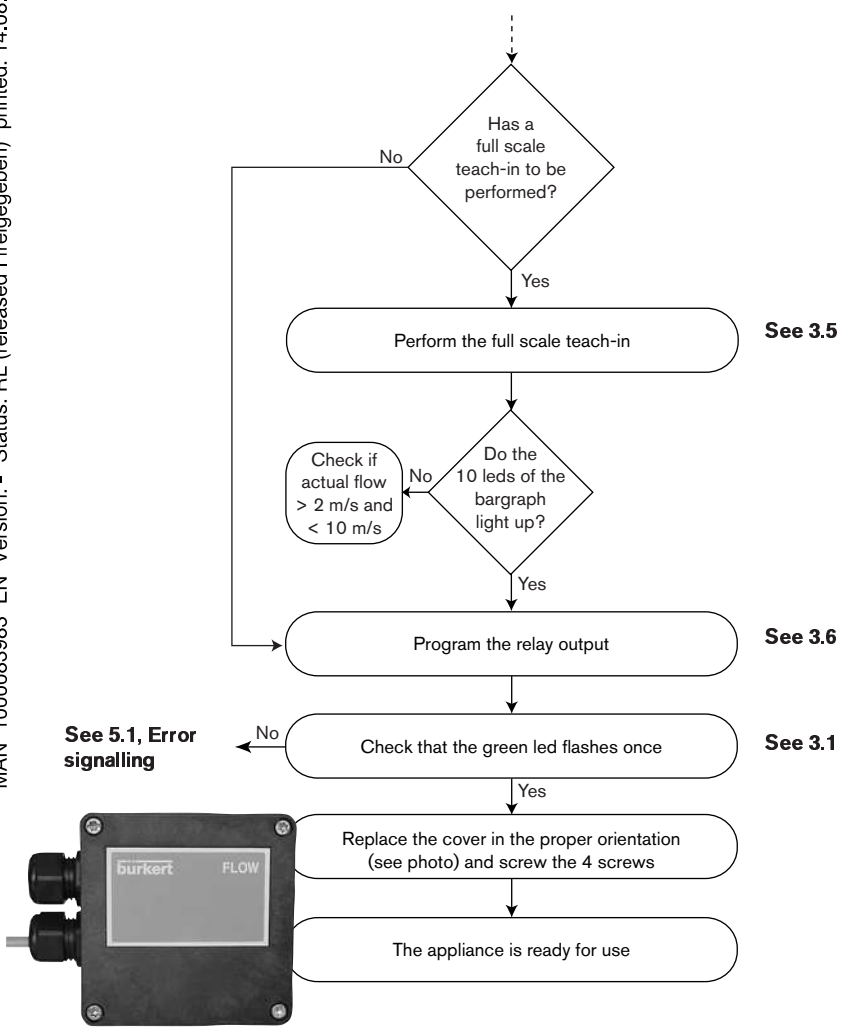

ENGLISH

Version: - Status: RL (released | freigegeben) | printed: 14.08.2008
MAN 1000083993 EN

3.1 GENERAL COMMENTS

The 8041 magmeter has 2 operating modes:

- the Readout mode: to visualize the measured flow velocity and the values programmed for the relay operation.
- the Configuration mode: to calibrate the device ("zero flow" point and measuring full scale) and program the relay parameters.

Configuration is done by means of accessible switches, push-button, leds and bargraph on the electronic board after having unscrewed the 4 screws and removed the cover of the magmeter.

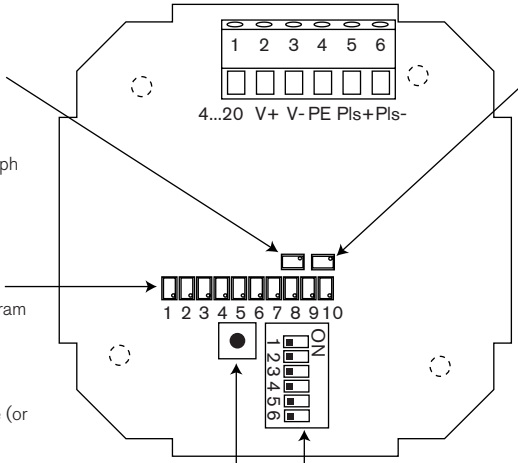

Green led
flashing once up to 5 times: to know which parameter the bargraph is indicating

10 led-bargraph:
to visualize and program the flowmeter parameters:

- 1 led lit = 10% of the full scale (or 10 seconds)
- in Readout mode: led flashing x times = x% of the full scale (or x seconds)

in Configuration mode: led flashing once = 1% of the full scale (or 1 second)

Red led:

- OFF: the sensor is in the Readout mode (measured velocity and programmable parameters)
- ON: the device is in Configuration mode (the parameters can be programmed)
- ..... blinking once up to 5 times: error signalling

Push-button

- Switches 1 to 5: to configure the flowmeter (mains frequency, filtering level of the measurements, measuring range)
- Switch 6: unused

Always replace the cover as indicated by the photo opposite ; Screw the 4 screws in an alternating pattern.



MAN 1000083983 EN Version: - Status: RL (released | freigegeben) printed: 14.08.2008

Example of a measured flow velocity visualized by the bargraph:

If the 0-10 m/s measuring range has been chosen, the following bargraph shows a measured flow velocity of 7.2 m/s (7 leds lit and the 8th led flashing twice = 72% of the full scale)



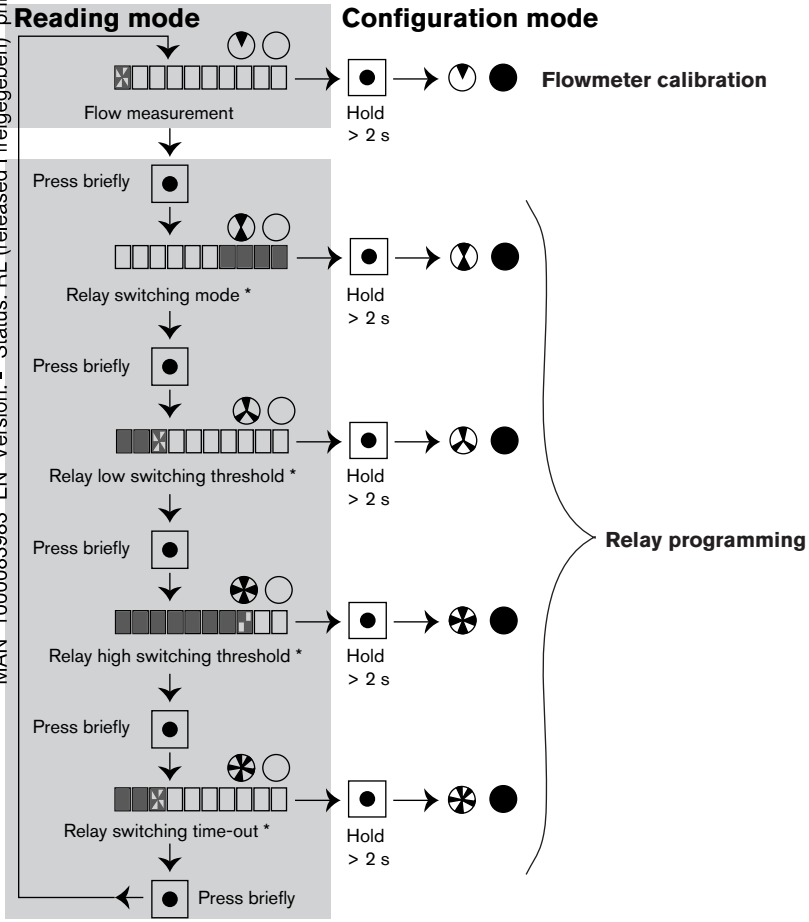

* The device automatically goes back to the reading mode of the flow velocity measurement, if the push-button is not pressed for 10 s.

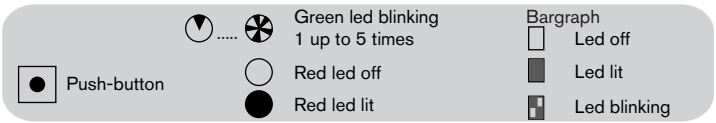

MAN 1000083983 EN Version: - Status: RL (released | freigegeben) printed: 14.08.2008

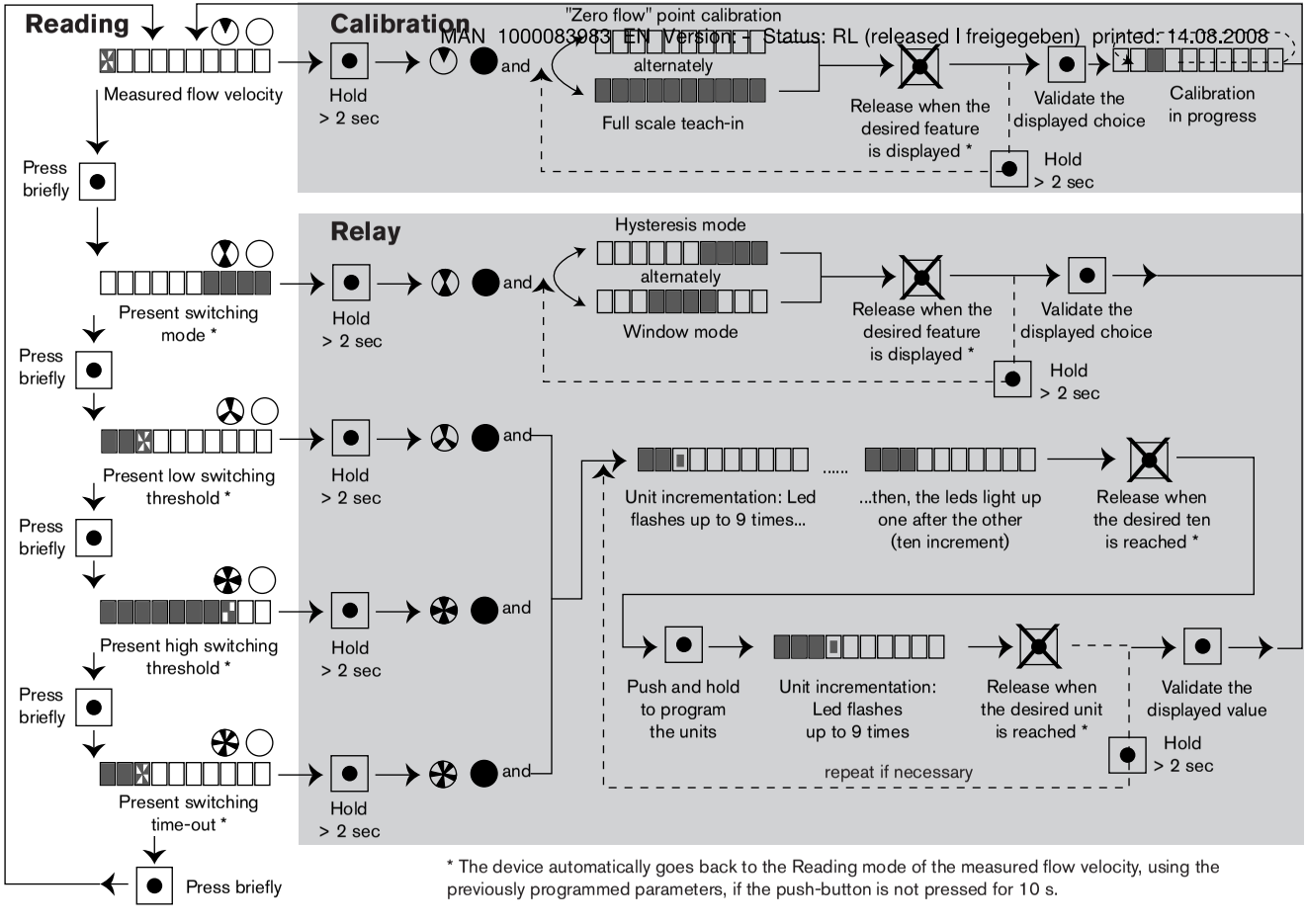

* The device automatically goes back to the Reading mode of the measured flow velocity, using the previously programmed parameters, if the push-button is not pressed for 10 s.

MAN 1000083983 EN Version: - Status: RL (released | freigegeben) printed: 14.08.2008

3.2 DEFINING THE MAINS FREQUENCY

Switch 1 makes it possible to select the frequency delivered by the mains:

Frequency of the power supplied by the network	Position of switch 1
50 Hz	OFF
60 Hz	ON

3.3 FILTERING LEVEL

Filtering allows the attenuation of fluctuations in the flow. The 8041 sensor can work without or with filtering.

Switch 2 makes it possible to activate or inhibit filtering :

Flow filtering activation	Position of switch 2
No	OFF
Yes	ON

If filtering has been activated, two filtering levels, slow or fast, are available through Switch 3:

Flow filtering	Position of switch 3
slow (10-90% response time = 14 s)	OFF
fast (10-90% response time = 5 s)	ON

MAN 1000039983 EN Version: - Status: RL (released I freigegeben) printed: 14.08.2008

- Slow filtering allows the smoothing out of strong variations in the flow (for example, fluid containing air bubbles)
- Fast filtering allows the smoothing out of weak variations in the flow.

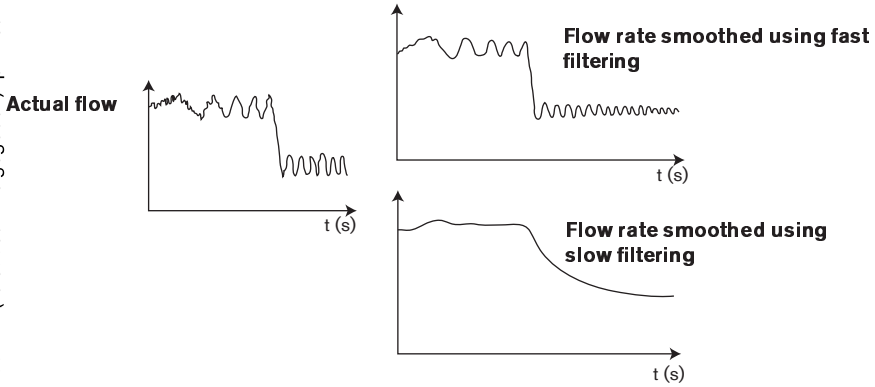

3.4 "ZERO FLOW" POINT CALIBRATION

Before using the sensor for the first time, its "zero flow" point must be calibrated.

- Fill the pipe with the fluid and then stop the flow.
- It is essential that the sensor be left in the fluid for 24 hours
- Ensure that there are no air bubbles in the pipe and that the fluid is immobile
- Check whether the green led flashes once and the red led is off (Readout mode). If not, refer to § 3.1
- Press and hold the push-button: after 2 seconds, the red led lights up (Configuration mode) and the bargraph shows the features "zero flow point calibration" and "full scale calibration" alternately.

Bargraph status

"zero flow" point calibration

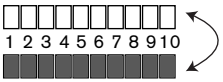

Full scale calibration

MAN 1000083983 EN Version: - Status: RL (released I freigegeben) printed: 14.08.2008

- Release the push-button when the “zero flow” point calibration feature is displayed, then you may:

  ➨ either press the push-button briefly to validate the displayed feature. The magmeter is automatically calibrated.

  At the end of calibration, the red led goes off: the magmeter has automatically returned to the flow velocity Readout mode.

  ➨ or press and hold the push-button to display another feature.

  ➨ or wait for 10 s to return to the measured flow velocity Readout mode, without validating the displayed feature.

Bargraph status



“zero flow” point calibration

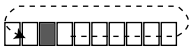

Calibration in progress

If the red led flashes twice rapidly, the zero flow point could not be calibrated: press the push-button briefly. The sensor returns to the measured flow velocity Readout mode and uses the zero flow point of the previous calibration.

3.5 MEASURING RANGE SELECTION OR FULL SCALE TEACH-IN

3.5.1 Selection of a predefined measuring range

The output signal is proportional to the measured flow velocity. The measuring range may be adapted to the application by means of switches 4 and 5:

Measuring range	Position of switches 4 and 5	
	Switch 4	Switch 5
0 to 2 m/s	ON	OFF
0 to 5 m/s	OFF	ON
0 to 10 m/s	OFF	OFF
0 to full scale (between 2 and 10 m/s) determined by teach-in	ON	ON

When selecting a new measuring range, the percentages programmed for the low and high thresholds apply to the new selected full scale.

MAN 1000083983 EN Version: - Status: RL (released I freigegeben) printed: 14.08.2008

3.5.2 Full scale teach-in

The following curves show the ratio between the fluid velocity measured and the frequency or current value delivered by the output:

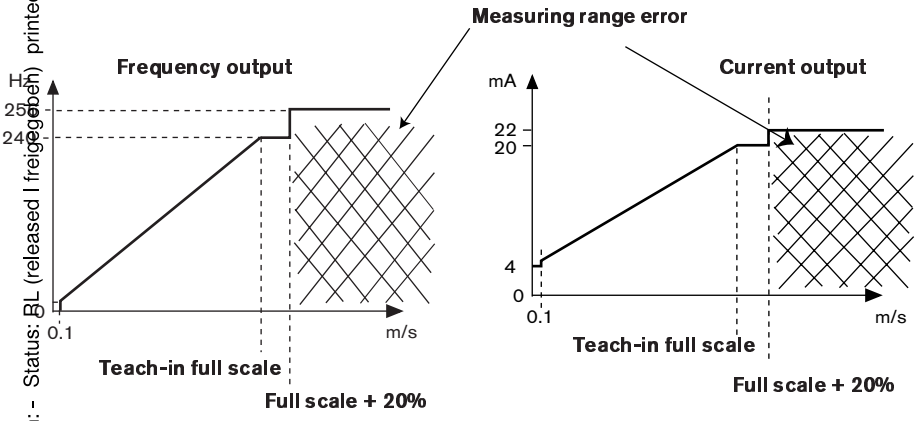

If no predefined measuring range is suited to your application, the 8041 sensor can be programmed with the actual max. flow velocity of the application.

The minimal value of the measuring range is 0 m/s.

- Set both switches 4 and 5 to ON
- Install the 8041 sensor into the pipe (see chapter Installation)
- Let the max. flow flow through the pipe
- Check whether the green led flashes once and the red led is off (Readout mode). If not, refer to § 3.1
- Press and hold the push-button: after 2 seconds, the red led lights up (Configuration mode) and the bargraph shows the features “zero flow point calibration” and “full scale calibration” alternately.

Bargraph status

“zero flow” point calibration

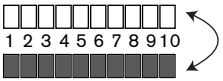

Full scale calibration

MAN 1000083983 EN Version: - Status: RL (released I freigegeben) printed: 14.08.2008

- Release the push-button when the “full scale calibration” feature is displayed, then you may:

  ➨ either press the push-button briefly to validate the displayed feature. The magmeter is automatically calibrated.

  At the end of calibration, the red led goes off: the magmeter has automatically returned to the flow velocity Readout mode.

  The teach-in full scale is saved by the electronics: it is used by the magmeter as soon as switches 4 and 5 are set to ON.

  ➨ or press and hold the push-button to display another feature.

  ➨ or wait for 10 s to return to the measured flow velocity Readout mode, without validating the displayed feature.

Bargraph status

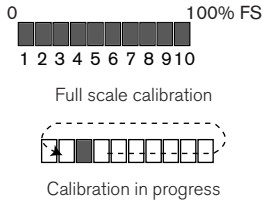

If the red led flashes 4 resp. 5 times rapidly, the actual max. fluid velocity is resp. < 2 m/s or > 10 m/s. Press the push-button briefly: the sensor returns to flow velocity measurement using the full scale of the previous calibration.

3.6 PROGRAMMING THE RELAY OUTPUT

The user can program the following parameters for the operation of the sensor relay output:

- The switching mode, either window or hysteresis
- The low switching threshold, in a percentage of the full scale
- The high switching threshold, in a percentage of the full scale
- The time-out before switching, from 0 to 100 s.

Whether the relay operating is Normally Open or Normally Closed is determined by the connection of the relay to the terminals of the electronic board.

MAN 1000083983 EN Version: - Status: RL (released | freigegeben) printed: 14.08.2008

The following diagram shows switching examples of the relay output depending on the different possible parameter settings and the flow velocity:

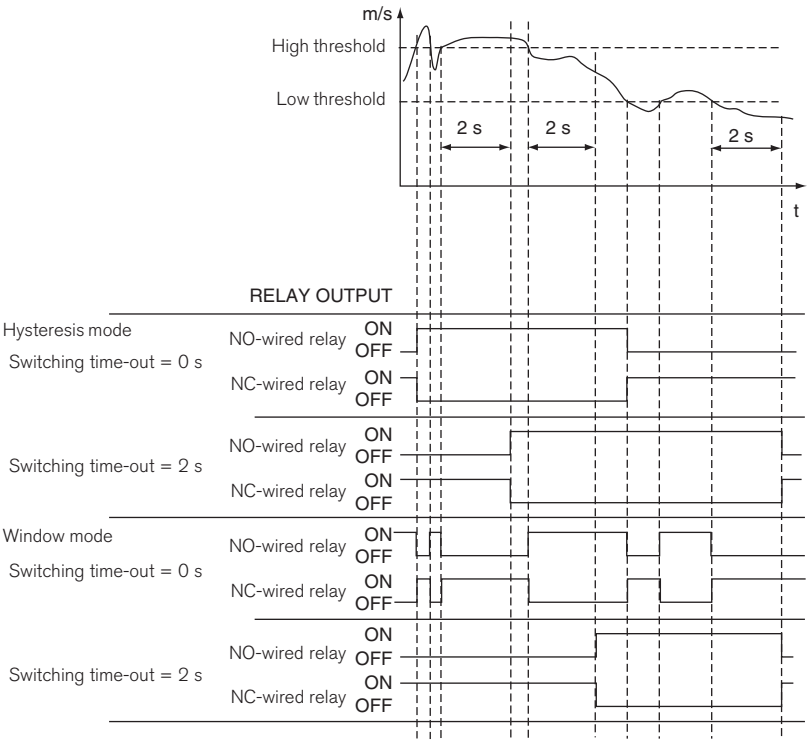

3.6.1 Switching mode of the relay output

The switching mode of the relay output can be chosen among 2 modes, either window or hysteresis.

- Window mode: the change of state of the relay output (OUT) occurs at any threshold detection:

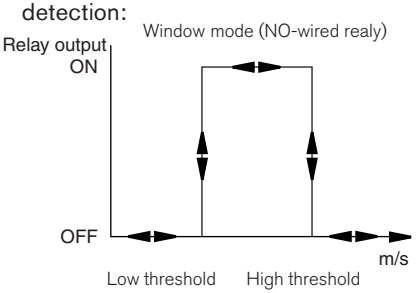

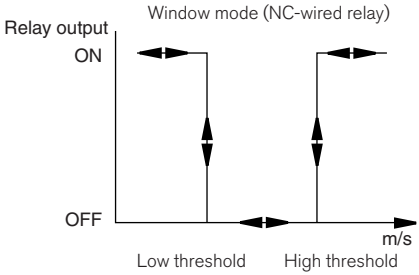

MAN 1000083983 EN Version: - Status: RL (released I freigegeben) printed: 14.08.2008

- Hysteresis mode: the change of state of the relay output (OUT) occurs at high threshold detection by increasing flow velocity and at low threshold detection by decreasing flow velocity:

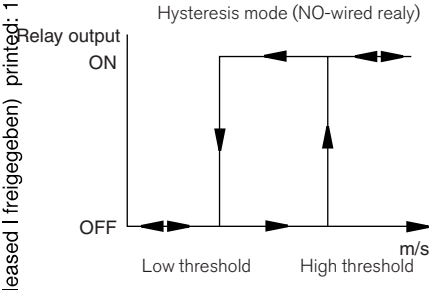

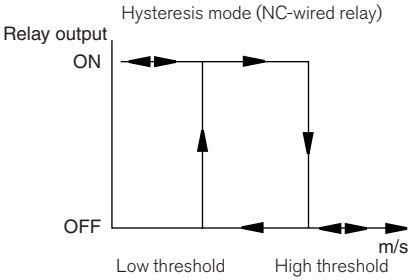

To change the relay switching mode, do as follows:

The green led flashes once and the red led is off (Readout mode). If not, refer to § 3.1

Press the push-button once briefly: the green led flashes twice and the bargraph shows the present switching mode.

Press and hold the push-button: after 2 seconds, the red led lights up (Configuration mode) and the bargraph shows the features “Hysteresis mode” and “Window mode” alternately.

- Release the push-button when the desired switching mode is displayed, then you may:
  - ➨ either press the push-button briefly to validate the displayed feature and automatically return to the flow velocity Readout mode.
  - ➨ or press and hold the push-button to display another feature.
  - ➨ or wait for 10 s to return to the measured flow velocity Readout mode, without validating the displayed feature.

Bargraph status

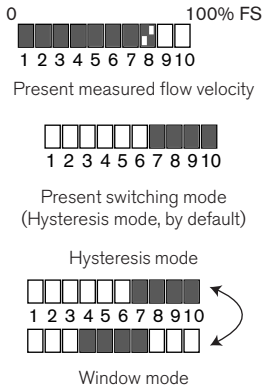

MAN 1000083983 EN Version - Status: RL (released | freigegeben) printed: 14.08.2008

3.6.2 Programming the low switching threshold

The low switching threshold can be programmed within a range between 0 and the high switching threshold

- The green led flashes once and the red led is off (Readout mode). If not, refer to § 3.1
- Press the push-button twice briefly: the green led flashes three times and the bargraph shows the present low threshold (in % of the full scale)
- Press and hold the push-button: after 2 seconds, the red led lights up (Configuration mode) and led N°1 of the bargraph flashes 9 times (1 flash = 1% of the full scale) then it lights up;
  The next leds then light up one after the other up to the high threshold;
  Release the push-button when the desired number of leds is lit (1 led lit = 10% of the full scale).
  Press and hold the push-button again: after 2 seconds, the next led flashes (1 flash = 1% of the full scale).
  Release the push-button when the led has flashed the desired times.
- If necessary, press and hold the push-button again to change the displayed value.
- Press the push-button briefly to validate the value visualized by the bargraph and automatically return to the flow velocity Readout mode or wait for 10 s to return to the flow velocity Readout mode without validating the displayed value.

Bargraph status



Present measured flow velocity



Present low threshold
(full scale by default)

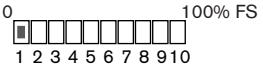

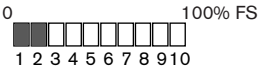

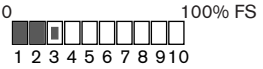

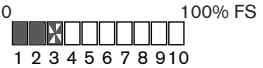

2 Leds lit = 20% of the full scale
3rd Led flashing 4 times = 4% of the full scale

The bargraph shows 24% of the full scale, ie. by a 0-10 m/s measuring range, this corresponds to a low threshold of 2.4 m/s

MAN 1000083983 EN Version: - Status: RL (released | freigegeben) printed: 14.08.2008

3.6.3 Programming the high switching threshold

The high switching threshold can be programmed within a range between the low switching threshold value and 100% of the full scale.

- The green led flashes once and the red led is off (Readout mode). If not, refer to § 3.1

Press the push-button 3 times briefly: the green led flashes four times and the bargraph shows the present high threshold (in % of the full scale)

Press and hold the push-button: after 2 seconds, the red led lights up (Configuration mode) and the first bargraph led following the low threshold value flashes 9 times (1 flash = 1% of the full scale) then it lights up; The next leds then light up one after the other up to 100%;
Release the push-button when the desired number of leds is lit (1 led lit = 10% of the full scale).

Press and hold the push-button again: after 2 seconds, the next led flashes (1 flash = 1% of the full scale). Release the push-button when the led has flashed the desired times.

If necessary, press and hold the push-button again to change the displayed value.

Press the push-button briefly to validate the value visualized by the bargraph and automatically return to the flow velocity Readout mode or wait for 10 s to return to the flow velocity Readout mode without validating the displayed value.

Bargraph status



Present measured flow velocity



Present high threshold
(full scale by default)

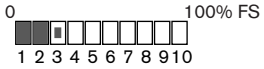







8 leds lit = 80% of the full scale
9th Led flashing twice = 2% of the full scale

The bargraph shows 82% of the full scale, i.e. by a 0-10 m/s measuring range, this corresponds to a high threshold of 8.2 m/s

ENGLISH

MAN 1000033833 EN Version: - Status: RL (released | freigegeben) printed: 14.08.2008

3.6.4 Programming the time-out before switching

If need be the switching threshold of the relay output can be timed-out (from 0 up to 100 seconds), i.e. the switching only occurs when either threshold is exceeded for a duration higher than the time-out.
A time-out set to 0 means that the switching occurs immediately.

To set the time-out, do as follows:

- The green led flashes once and the red led is off (Readout mode). If not, refer to § 3.1
- Press the push-button four times briefly: the green led flashes five times and the bargraph shows the present time-out (in seconds).
- Press the push-button and hold: After 2 seconds the red led lights up (Configuration mode) and led N°1 of the bargraph flashes 9 times (1 flash = 1 s) then it lights up;
  The next leds then light up one after the other;
  Release the push-button when the desired number of leds is lit (1 led lit = 10 s).
  Press and hold the push-button again: After 2 seconds the next led flashes (1 flash = 1 s).
  Release the push-button when the desired flashing is reached.
- If necessary, press and hold the push-button again to change the displayed value.
- Press the push-button briefly to validate the value visualized by the bargraph and automatically return to the flow velocity Readout mode or wait for 10 s to return to the flow velocity Readout mode without validating the displayed value.

Bargraph status



Present measured flow velocity



Present switching time-out
(100 sec, by default)

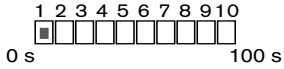







5 leds lit = 50 sec
6th led flashing 2 times = 2 seconds

The bargraph shows a time-out of 52 seconds

MAN 1000083983 EN Version: - Status: RL (released | freigegeben) printed: 14.08.2008

4.1 INSTALLATION GUIDELINES

4.1.1 Pressure-Temperature diagram

Please be aware of the fluid pressure-temperature dependence according to the respective fitting+sensor material as shown in the diagram below:

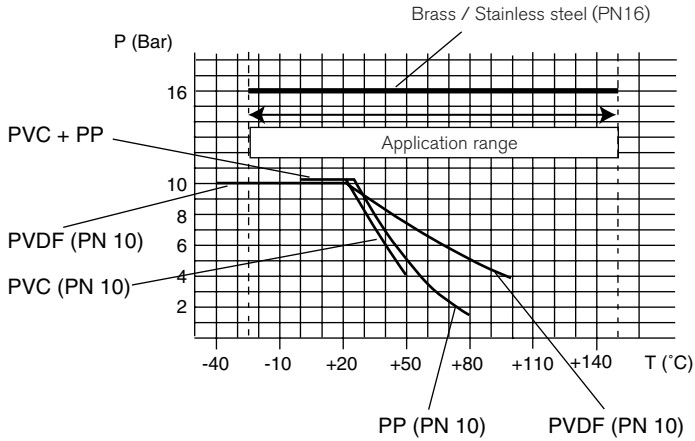

- **The device must be protected against the rain, constant heat radiation and other environmental influences such as magnetic fields or direct exposure to sunlight.**
- **Ensure the device is not located near any large machinery which may interfere with the transmitter as this can have an effect on the measurements.**
- **Dismounting precautions: All precautions must be taken before removing the transmitter from the pipe depending on the process used as the pipe may contain dangerous/agressive hot fluids or fluids with high temperatures or pressures.**

MAN 1000083983 EN Version: - Status: RL (released | freigegeben) printed: 4.08.2008

4.1.2 Mounting positions

The transmitter can be mounted in the following ways to obtain an accurate flow measurement although the piping should be designed to ensure that the pipe is maintained full at all times to avoid inaccurate measurement.

Mounting horizontally

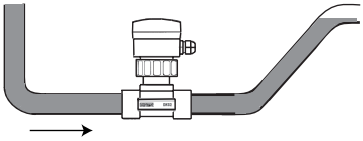

Correct

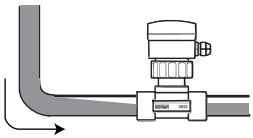

Incorrect

Mounting vertically

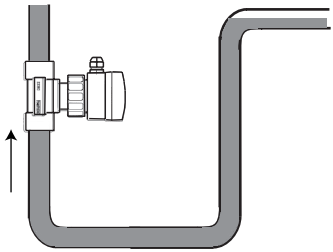

Correct

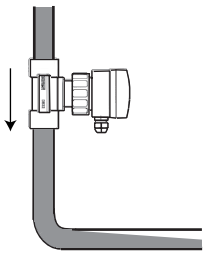

Incorrect

- **When mounting vertically ensure that the flow direction is in an upward direction as indicated by the arrow.**
- **Always mount the transmitter upstream a possible injection point in the pipe of a high conductivity product (acid, base, saline,...).**

It is advisable to mount the transmitter at a 45° angle to the horizontal centre of the pipe as shown in the diagram to avoid having deposits on the electrodes and false measurements due to air bubbles.

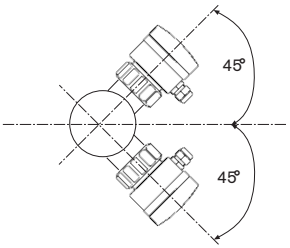

MAN 1000083983 EN Version: - Status: RL (released | freigegeben) printed: 14.08.2008

The minimum straight upstream (10 x DN) and downstream (3 x DN) distances must be observed.

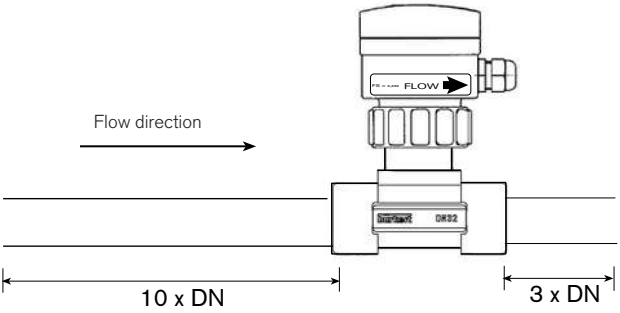

Please ensure the pipe design does not allow the build up of air bubbles or cavities within the medium as this will cause measuring errors.

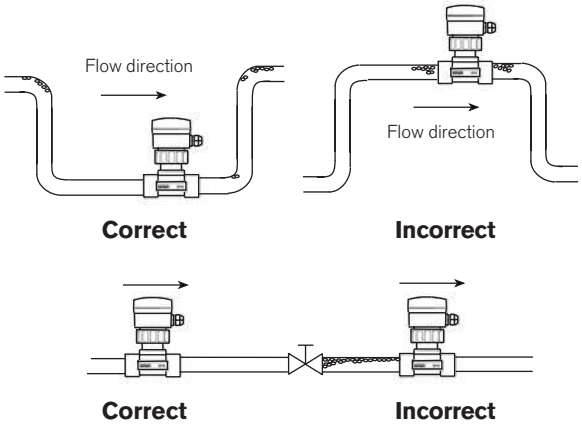

MAN 1000083983 EN Version: - Status: RL (released | freigegeben) printed: 14.08.2008

4.2 INSTALLATION

The device can be installed into pipes using our special fitting system S020.

The fitting **4** must be installed into the pipe according to the installation guidelines within section 4.1. Then:

- Insert the plastic nut **3** onto the fitting **4** and snap the plastic ring **2** into the guide bush **5**.
- Insert the sensor into the fitting ensuring the arrow on the side of the housing indicates the flow direction and ensuring the cable glands show the downstream direction and the alignment of the electrodes is perpendicular to the flow direction.

The plastic nut must only be tightened by hand!

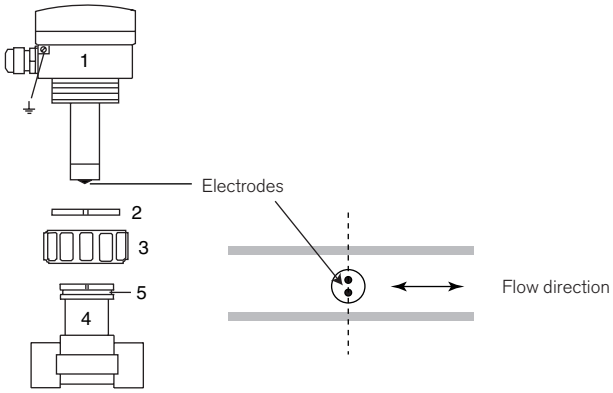

4.3 GENERAL ELECTRICAL CONNECTION

- Use cables with a temperature limit of 105°C minimum.
- For normal operating conditions the measuring signal can be transmitted by a shielded cable of 0.75 mm² cross section.
- The cable must not be installed in combination with carrying lines with a higher voltage or frequency.

MAN 1000083983 EN Version: - Status: RL (released | freigegeben) printed: 14.08.2008

- If a combined installation cannot be avoided, a minimum space of 30 cm (1 ft) should be respected.

The cable diameter must be between 6 and 12 mm;
If 2 cables are needed, use the supplied multiway seal and 4-mm diameter cables.

The power supply must be regulated.

Ensure the equipotentiality of the installation (power supply - transmitter - fluid):

- The various earth spots in the installation have to be connected together to eliminate the potential differences that may occur between different earthes.
- Observe faultless grounding of the shield at both ends of the cable.
- Earth the negative terminal of the power supply to suppress the common mode currents. If direct earthing is not possible insert a 100 nF/50 V-condensator between the negative terminal and the earth.
  Special attention has to be paid if the transmitter is installed on plastic pipes because there is no direct earthing possible.

Proper earthing is performed by earthing together the metallic devices such as pumps or valves, that are as close as possible to the magmeter. If no such devices are present, insert metallic piping parts (earthing rings, not supplied) into the plastic pipes before and after the magmeter and earth them together.
The earthing rings must be in contact with the fluid.

Inside of the housing: Connect the shielding to the earth.
Take care not to completely untighten the screw.
Insert the shielding. Retighten screw.



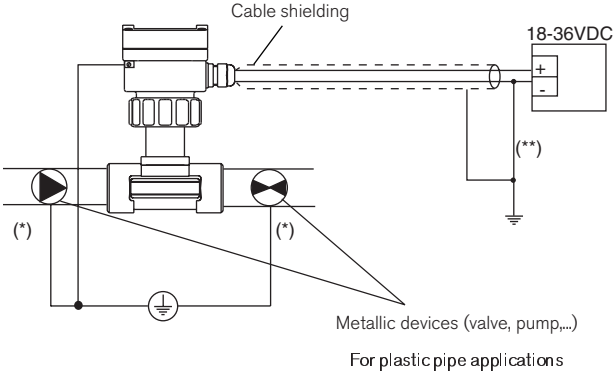

For plastic pipe applications

(*) or metallic parts, inserted inside the pipe.

(**) If direct earthing is impossible, connect a 100 nF/50 V-condensator between the negative terminal of the power supply and the earth.

MAN 1000083983 EN Version: I Status: RL (released | freigegeben) printed: 14.08.2013

- **Do not wire the magmeter with the power supply connected.**
- **It is advisable to put security devices on:**

  Power supply: Fuse (300 mA) and an interrupter
  Relay: 3A max. fuse and circuit breaker (depending on application)
- **Do not apply both a dangerous voltage and a very low safety voltage to the relay**

4.4 ELECTRICAL WIRING

Remove the cover via the 4 screws on the top of the magmeter to access the electronic board, pull the cables through the cable glands and wire according one of the following diagrams.

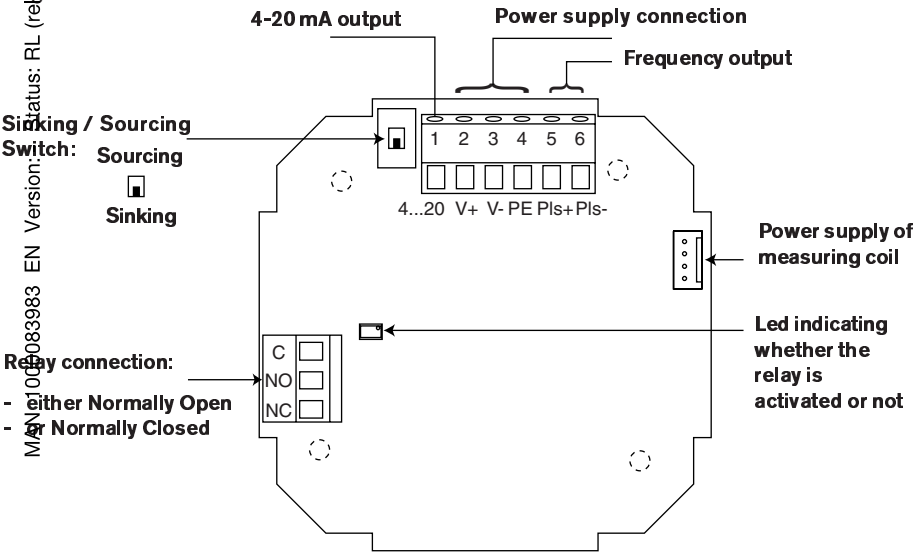

If only one cable gland is used, seal the unused cable gland using the supplied obstructor to ensure the tightness of the magmeter. Unscrew the cable gland nut, insert the obstructor and screw the nut back onto the cable gland.

Always replace the cover as indicated by the photo opposite ; Screw the 4 screws in an alternating pattern.



MAN 1000083983 EN Version: - Status: RL (released I freigegeben) printed: 14.08.2008

4.4.1 Connection of the 4-20 mA current output

The current output can be connected to an external device (PLC,...) with either sourcing or sinking 4-20 mA entry.

Set the Sourcing/sinking switch to the desired position by power off.

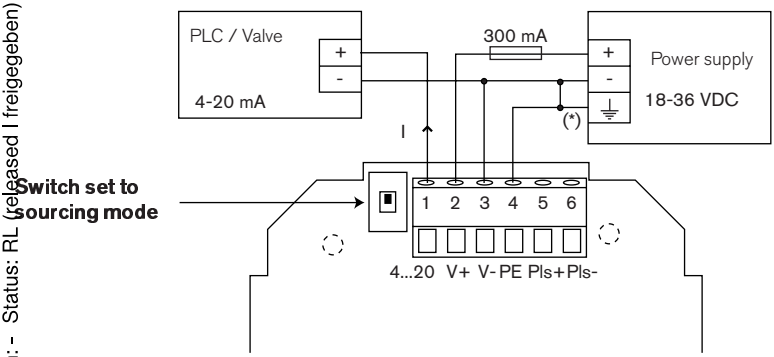

Connection in sourcing mode

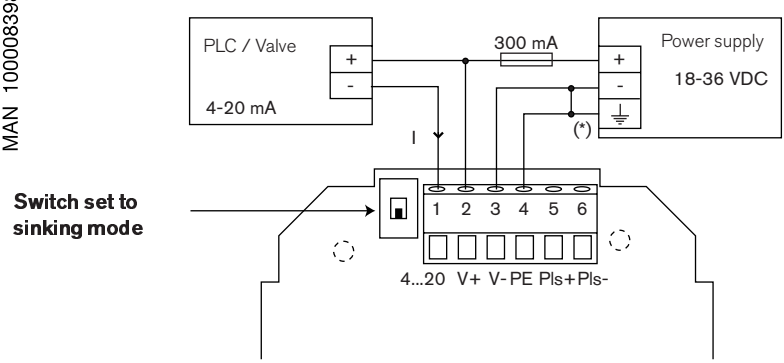

Connection in sinking mode

(*) If direct earthing is impossible, connect a 100 nF/50 V-condensator between the negative terminal of the power supply and the earth.

MAN 1000083988 EN Version: - Status: RL (released | freigegeben) printed: 14.08.2008

4.4.2 Connection of the frequency output

The frequency output may be connected to a programming logic controller (PLC) or a counter.

Connection to a PLC is done on the basis of the following diagrams:

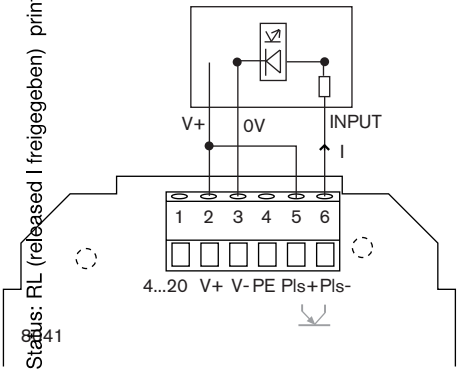

Connection to a PLC with common - (PNP)

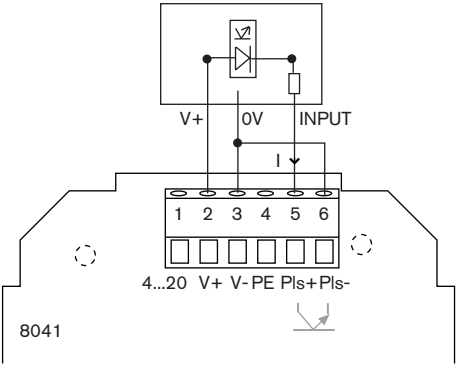

Connection to a PLC with common + (NPN)

Connection of a load is done on the basis of the following diagrams:

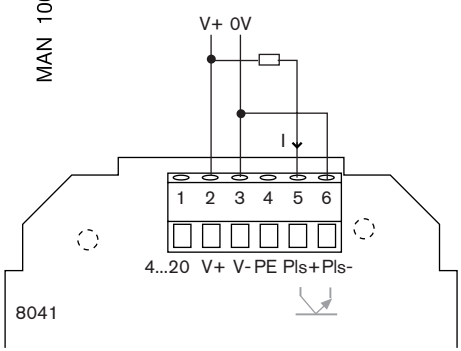

Connection to an electro-mechanical counter or relay

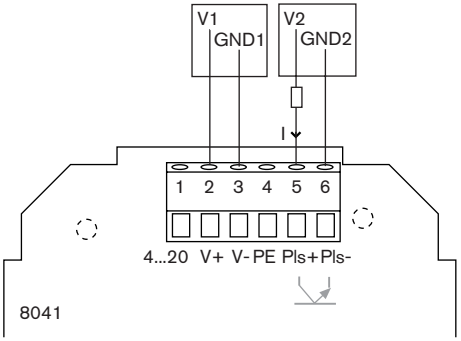

Connection to an electronic counter with powered input

MAN 1000083983 EN Version: - Status: RL (released | freigegeben) printed: 14.08.2008

4.4.3 Connection of the relay output

The relay output can operate either in a Normally Open or Normally Closed configuration depending on the wiring to the 8041 electronic board.

Normally Open Connection of the relay

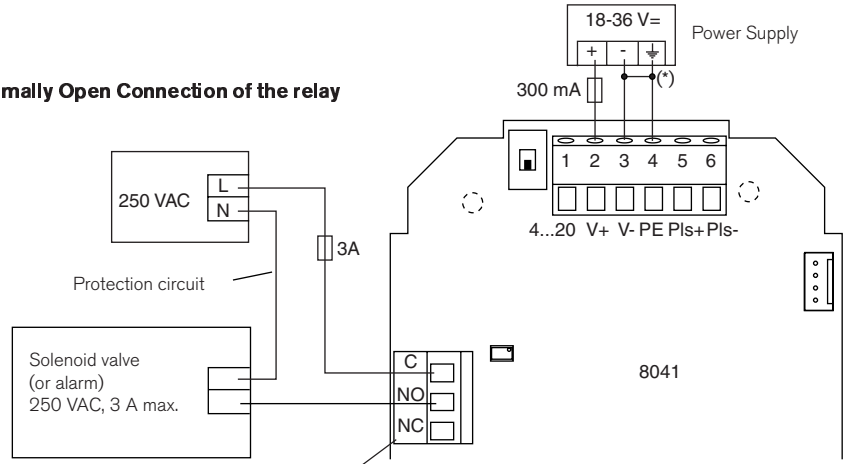

Relay protection cap

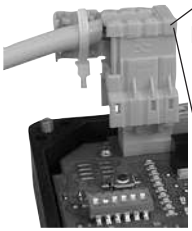

Normally Closed Connection of the relay

(*) If direct earthing is impossible, connect a 100 nF/50 V-condensator between the negative terminal of the power supply and the earth.

MAN, 1000083983 EN Version: - Status: RL (released | freigegeben) printed: 14.08.2008

5.1 ERROR SIGNALLING

An error is indicated by special flashing of the red led.

What happens ?	Bargraph status	Red LED status	Current or Frequency output indication	Possible cause	Do the following	See also
The sensor does not work	OFF	OFF	0 mA and 0 Hz	The sensor is not connected	Connect the sensor	4.4
				The fuse of the installation is in a bad condition	Change the fuse	--
				The switch of the installation is set to OFF	Set the switch to ON	--
				The power supply has been wrong connected to the + and - terminals	Check the wiring	4.4
				The power supply is not stable	Change the power supply	--
				The sensor is out of service	Send the device back to Burkert	--
The flow measurements are not stable	Unstable	OFF	> 4 mA and > 0 Hz	The electrodes are dirty	Clean the sensor electrodes	5.2
				The electrodes are not in contact with the fluid	Ensure the electrodes are always in contact with the fluid	4.1
				Air bubbles appear within the fluid	Follow the mounting instructions	4.1.2
					Select the "slow" filtering	3.3
				The sensor has not been left within the fluid for 24 hours before calibration	Follow the calibration procedure	3.4
				The flow fluctuations are very important	Select the "slow" filtering (switch 3)	3.3
				Upstream-downstream connection has not been performed properly	Perform a correct upstream-downstream connection	4.1.2
The sensor does not measure a nil flow	ON	OFF	> 4 mA and > 0 Hz	The "zero flow" point has not been calibrated correctly	Perform a new calibration	3.4

What happens ?	Bargraph status	Red LED status	Current or Frequency output indication	Possible cause	Do the following	See also
Wrong flow rate measurements	-	OFF	-	The K factor has not been calculated correctly	Recalculate the K factor	1.4
	all leds lit	OFF	20 mA and 240 Hz	Measuring range exceeded by less than 20%	Select the next measuring range	3,5
The sensor transmits no current or no frequency at all	ON	OFF	0 mA and/or 0 Hz	The sourcing / sinking switch has not been set correctly The outputs are not connected properly	Modify the sourcing/sinking switch Re-connect the outputs	4.4.1 4.4
The sensor is stopped - an error is indicated	OFF	Flashes once briefly every 2 s	22 mA and 256 Hz	Measuring range exceeded by more than 20%	Press the push-button briefly. Select the next measuring range See the flow-velocity-DN diagrams	3.5 7.2
	OFF	Flashes twice briefly every 2 s	22 mA and 0 Hz	The "zero flow" point calibration failed	Press the push-button briefly. Perform a new calibration Check the upstream-downstream connection If the error persists, send the device back to Burkert.	3.4 4.1.2 --
	OFF	Flashes 3 times briefly every 2 s	22 mA and 0 Hz	The sensor is out of service	Send the device back to Burkert.	
	OFF	Flashes 4 times briefly every 2 s	22 mA and 0 Hz	The full scale teach-in failed because the fluid velocity < 2 m/s	Press the push-button briefly. Check the fluid velocity and perform a new teach-in or choose a predefined measuring range	3.5
	OFF	Flashes 5 times briefly every 2 s	22 mA and 0 Hz	The full scale teach-in failed because the fluid velocity > 10 m/s	Press the push-button briefly. Check the fluid velocity and perform a new teach-in or choose a predefined measuring range	3.5

5.2 CLEANING

The 8041 sensor may be cleaned with water or a product which is compatible with the materials therein.Your Burkert supplier is available to provide you with any additional information you require.

MAN 1000083363 EN Version: RL Status: RL (released | freigegeben) printed: 14.08.2008

6.1 PROCESS CHARACTERISTICS

Flow measurement

- Type of measurement	Electromagnetic measurement
- Measuring range	0,1 to 10 m/s
- Linearity	+/- (1% of the M.V. + 0.1% of the full scale)
- Repeatability	0.25% of the M.V.
- Accuracy (for M.V. from 1 to 10 m/s and -20 °C < T° < 130 °C)	+/-2% of the M.V., with calibration on site (for ex. teach-in with a 8025 transmitter) +/-4% of the M.V., with standard K factor*.

* In the reference conditions, where: fluid = water, water and ambient temperatures = 20 °C, upstream and downstream distances complied with, pipe dimensions adapted.

M.V. = measured value

General data

- Current output refresh rate	100 ms
- Pressure class	Depends on the temperature and fitting material (see 4.1.1)
- Fluid temperature	-20 °C up to 150 °C
- Minimum fluid conductivity	20 µS/cm
- Materials in contact with the fluid	Finger: stainless steel 316L (DIN 1.4404) and PEEK Seals: EPDM (KTW agreement)

6.2 ELECTRICAL CHARACTERISTICS

Pulse rate output

- Output type	Frequency output from 0 to 240 Hz (256 Hz for error signalling), Duty cycle = 50% +/-1%
- Max current	100 mA (protected against short-circuits and polarity reversals)

Current output

- Output type	Current output from 4 to 20 mA (22 mA for error signalling)
- Electrical wiring	sourcing or sinking mode

MAN 1000083983 EN Version: - Status: RL (released | freigegeben) printed: 14.08.2008

Relay output

Output type	Normally Open or Normally Closed, depending on wiring 250 VAC, 3A

Electrical connection

Power supply voltage	18 to 36 VDC, regulated
Maximum current consumption	220 mA

6.3 SAFETY

Wiring protected against polarity reversal
User parameters saved in EEPROM

6.4 ENVIRONMENT

Operating and storage ambiant temperatures	0 to 60 °C
Operating and storage humidity rating	< 80%, non condensated
Housing and cover material	PPA, glass fiber reinforced
Protection rating	IP65

6.5 CONFORMITY WITH STANDARDS

- Emission	EN 50081.1
- Protection	EN 61000-6-2
- Safety	EN 61010-1
- Vibration	CEI 68-2-6
- Shock	CEI 68-2-27

- The device also complies with directive N° 97/23/EC about the devices set under pressure, according to the following methods:
  - Fluids of group 1 according to §1.3b of the directive: PN ≤ 16 bar and DN < 125
  - Fluids of group 2 according to §1.3b of the directive: PN ≤ 16 bar and DN ≤ 200

  It has been designed and manufactured professionally (Article 3.3).
  The CE mark is not for pressure.
  The CE mark complies with directives 89/336/EC (EMC) and 73/23/EC (LVD).

6.6 DIMENSIONS

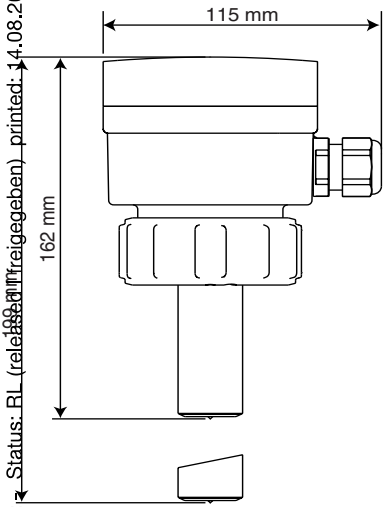

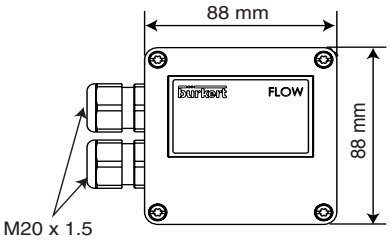

MAN 1000083983 EN Version: I Status: RL (released | freigegeben) printed: 14.08.2008

6.7 LABEL DESCRIPTION

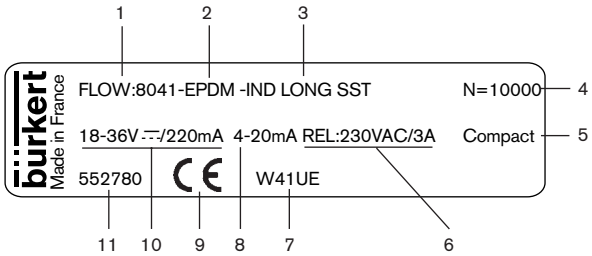

1. Type of magmeter
2. Gasket material
3. Sensor characteristics
4. Serial number
5. Version of the magmeter
6. Relay data
7. Manufacturer code
8. Current output
9. CE logo
10. Power supply / Max. consumption
11. Order code

MAN 1000083983 EN Version: - Status: RL (released I freigegeben) printed: 14.08.2008

7.1 ORDER CODES

7.1.1 Finished products

552779: 8041 with 1 short stainless steel sensor, 1 current output, 1 frequency output, 1 relay output, 2 M20 x 1.5 mm cable glands
+ 1 set including 1 cable gland obturator, 1 cable gland 2x6 mm multiway seal, 1 black EPDM gasket for the sensor, 1 mounting instruction sheet
+ 1 relay connection kit

552780: 8041 with 1 long stainless steel sensor, 1 current output, 1 frequency output, 1 relay output, 2 M20 x 1.5 mm cable glands
+ 1 set including 1 cable gland obturator, 1 cable gland 2x6 mm multiway seal, 1 black EPDM gasket for the sensor, 1 mounting instruction sheet
+ 1 relay connection kit

7.1.2 Accessories and spare parts

Designation	Order code
Set including 2 cable glands M20x1.5 + 2 neoprene flat seals for cable gland or plug + 2 screw-plugs M20x1.5 + 2 multiway seals 2x6 mm	449755
Set including 2 reductions M20x1.5 / NPT1/2" + 2 neoprene flat seals for cable gland or plug + 2 screw-plugs M20x1.5	551782
Set including 1 cable gland obturator M20x1.5 + 1 multiway seals 2x6 mm for cable gland or plug + 1 black EPDM gasket for the sensor + 1 mounting instruction sheet	551775
Ring	619205
PPA nut	440229
Set including 1 green FPM + 1 black EPDM gasket	552111
Relay connection kit including 1 screw terminal strip + 1 protection cap + 1 Rilsan + 1 mounting instruction sheet	552812

MAN 1000083983 EN Version: - Status: RL (released I freigegeben) printed: 14.08.2008

7.2 FLOW CHARTS

These charts make it possible to choose the best suited fitting diameter depending on the application flow rate and velocity.

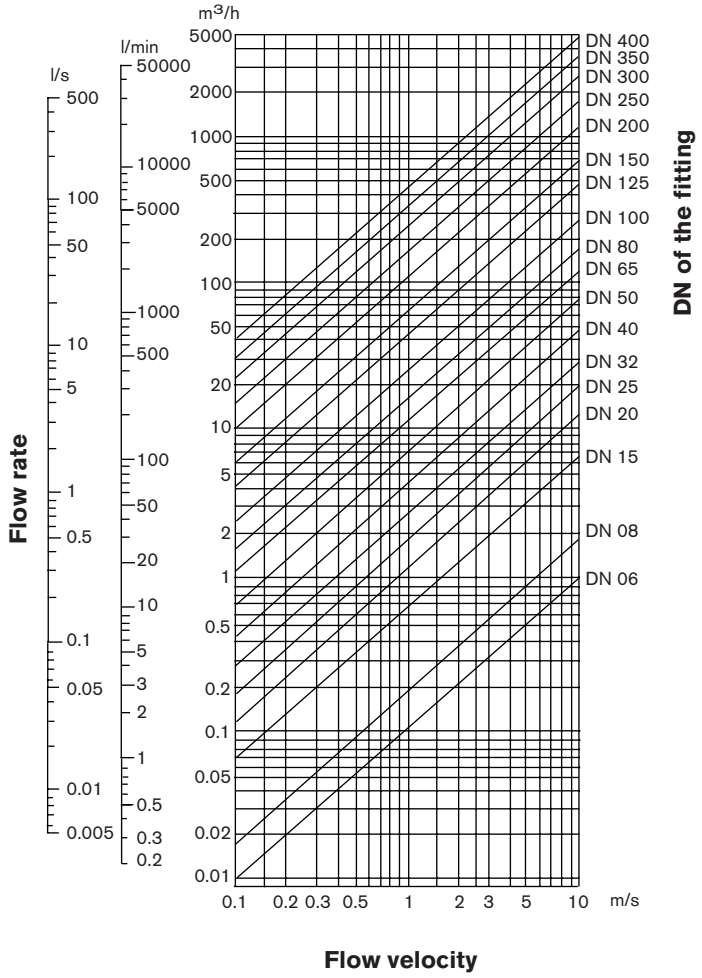

Selection example: Nominal flow rate = 10 m³/h
Ideal flow velocity = 2-3 m/s

=> As defined by the flow chart the required fitting diameter is DN40.

MAN 1000083983 EN Version: - Status: RL (released | freigegeben) printed: 14.08.2008

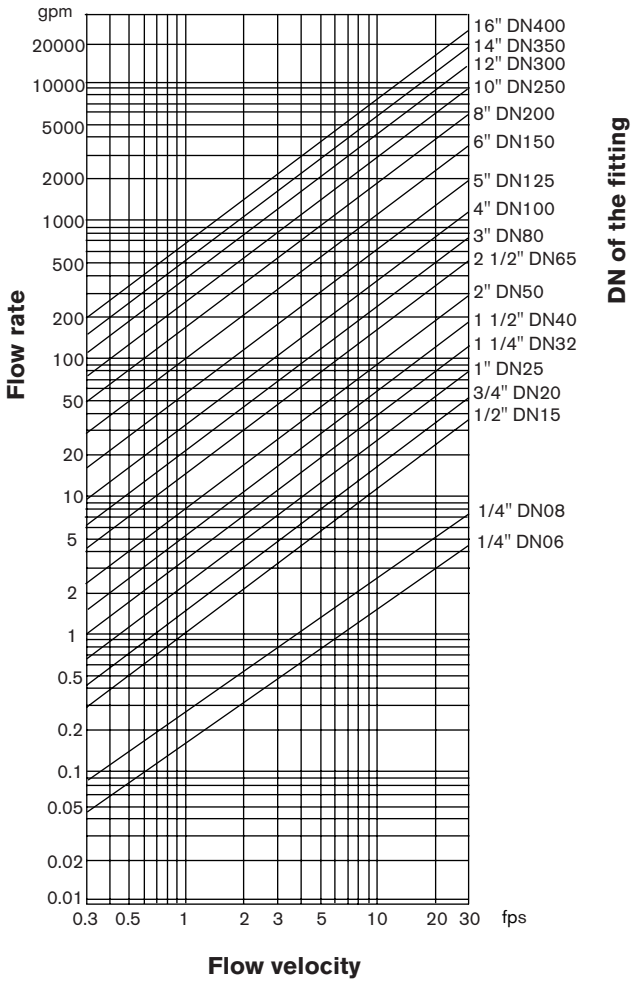

Selection example:

Nominal flow rate = 50 gpm
Ideal flow velocity = 8 fps

=> As defined by the flow chart the required fitting diameter is 1''1/2.

ENGLISH

MAN 1000083983 EN Version: - Status: RL (released I freigegeben) printed: 14.08.2008

7.3 CONNECTION EXAMPLES

Between the 8041 magmeter and the flow transmitter 8025, Low Flow or Batch, in a panel version.

On a panel version of the 8025 Low Flow, set SW100 to position 1 and SW101 to position 3.

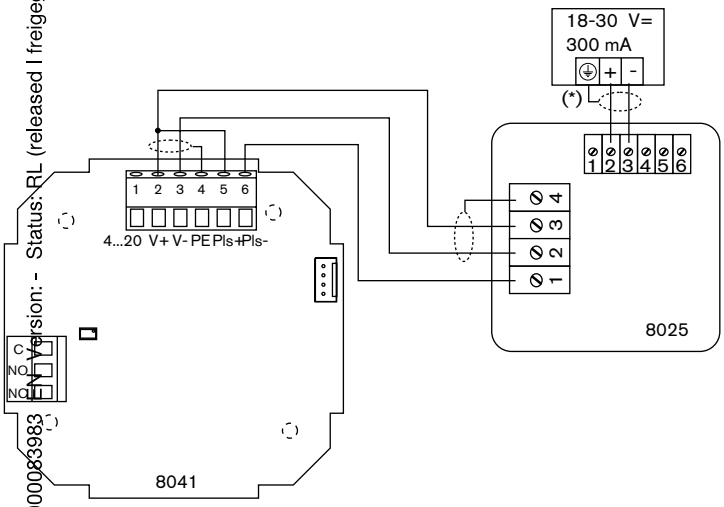



8025, panel version

(*) If direct earthing is impossible, connect a 100 nF/50 V- condensator between the negative terminal of the power supply and the earth.

Order codes of the 8025, Low Flow or Batch which can be connected to the 8041

8025	Technical data		Order code
LOW FLOW	Panel version 18-30 VDC	with relays	419537
		without relay	419538
	Wall-mounted version 18-30 VDC	with relays	419540
		without relay	419541
	Wall-mounted version 115/230 VAC	without relay	419544
BATCH	Panel version 18-30 VDC	with relays	419536
	Wall-mounted version 18-30 VDC	with relays	433740

MAN 1000083983 EN Version: - Status: RL (released | freigegeben) printed: 14.08.2008

Between the 8041 magmeter and the positioner 1067 mounted on a diaphragm valve 2031

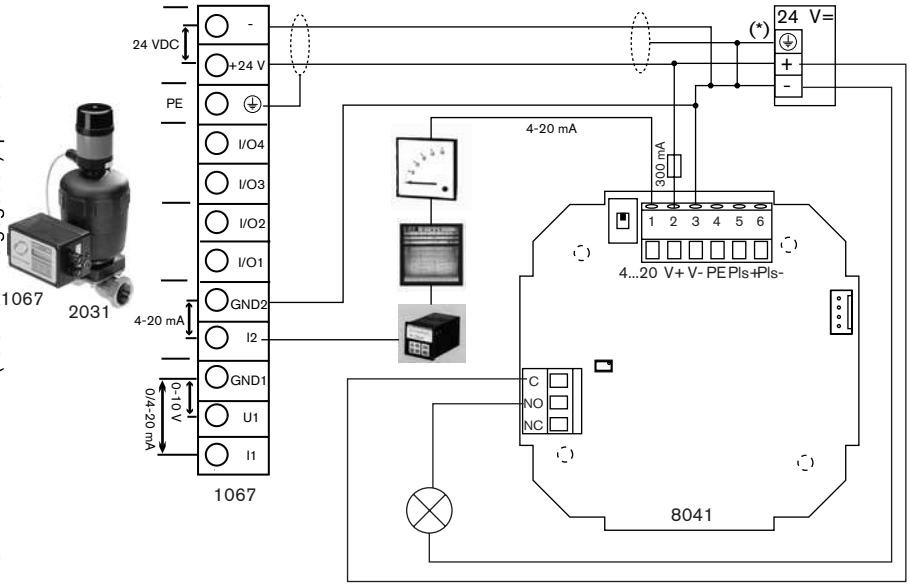

Between the 8041 magmeter and the TopControl 8631 mounted on a diaphragm valve 2031

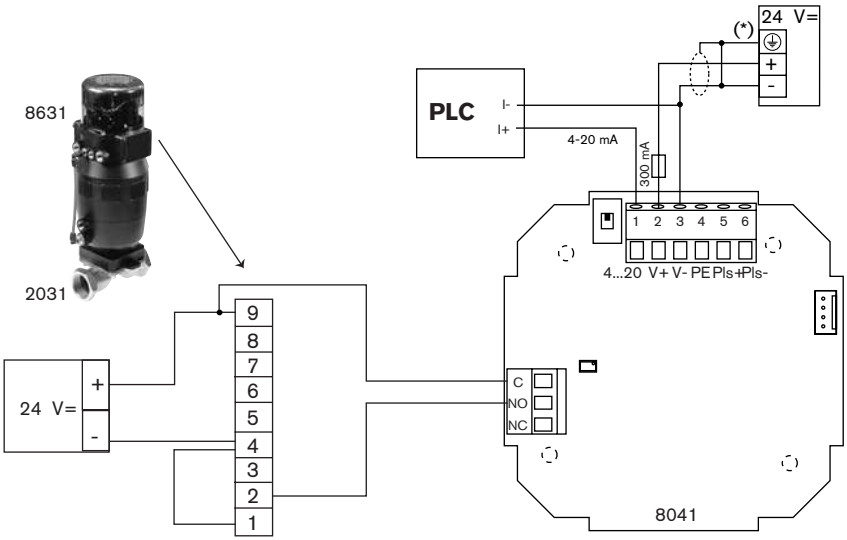

(*) If direct earthing is impossible, connect a 100 nF/50 V-condensator between the negative terminal of the power supply and the earth.

MAN 1000083983 EN Version: - Status: RL (released | freigegeben) printed: 14.08.2008