E20164

Fibre optic through-beam sensor

FE-30-P-A-M6

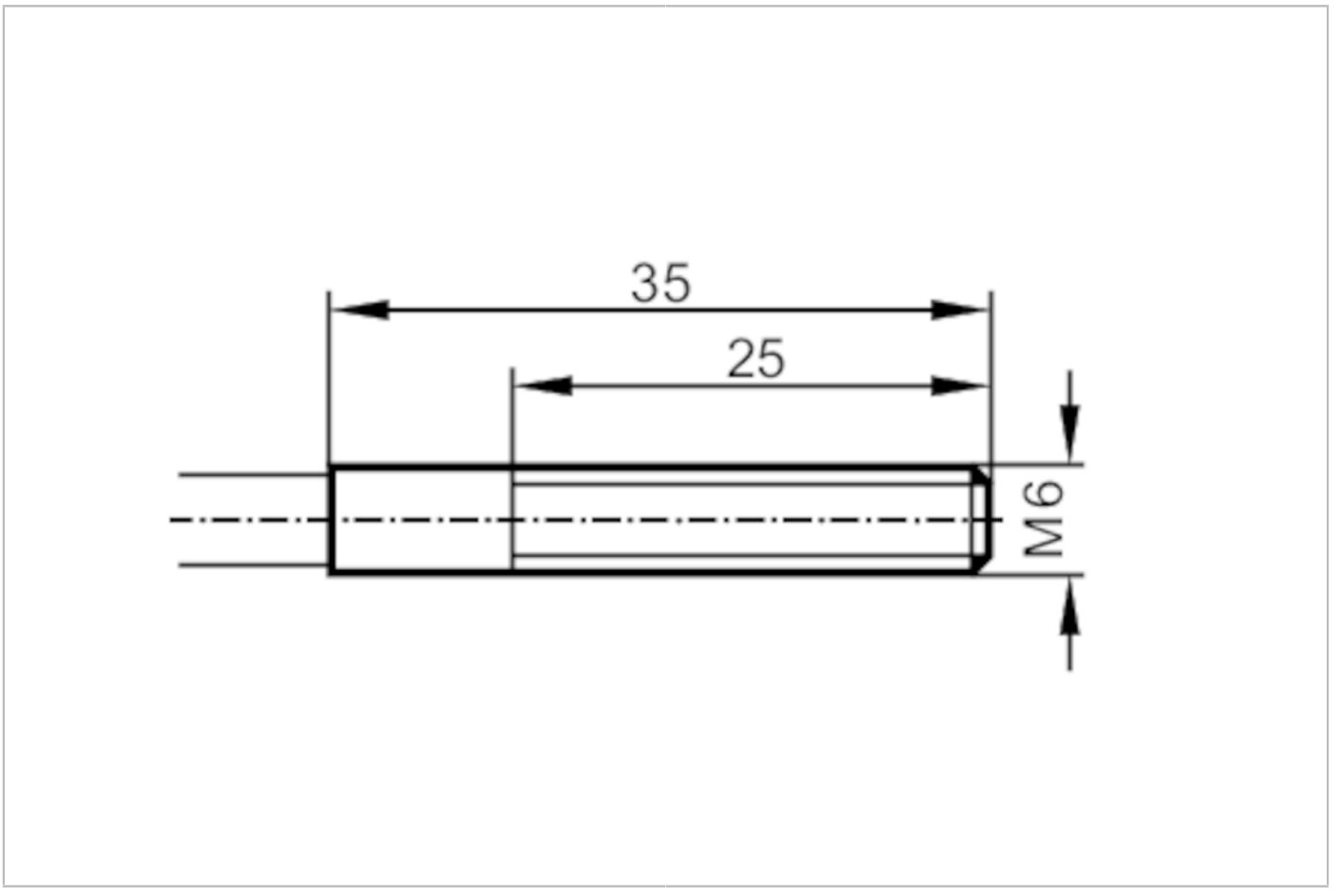

Application		
Function principle		Through-beam sensor
Application		For use in industrial environments
Detection zone		
Range with fibre-optic amplifier type		OIF
OIF		
Range of fibre optics	[mm]	300
Operating conditions		
Ambient temperature	[°C]	-20...80
Mechanical data		
Weight	[g]	98.5
Version of sensing head		straight
Sensing head thread		M6
Sensing head length	[mm]	35
Total length	[mm]	600
Min. bending radius	[mm]	30
Fibre arrangement		◉
Materials		Adapter: PA
Fibre material		glass

E20164

Fibre optic through-beam sensor

FE-30-P-A-M6

Fibre head material	aluminium
Fibre sheath material	PVC
Accessories	
Items supplied	hexagon nuts: 4 x M6, stainless steel
	tooth lock washers: 4
	knurled nut: 1 x M30
Remarks	
Pack quantity	1 pcs.