KF5014

Capacitive sensor

KFA3040BBPKG

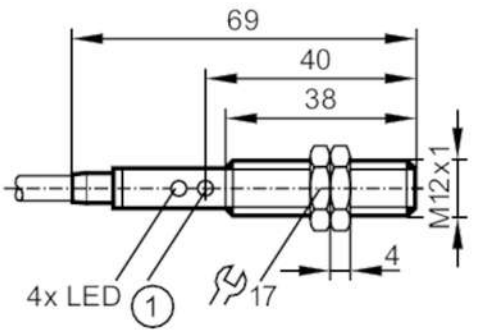

1 potentiometer

Product characteristics		
Electrical design		PNP
Output function		normally open
Sensing range	[mm]	4
Housing		threaded type
Dimensions	[mm]	M12 x 1 / L = 69
Electrical data		
Operating voltage	[V]	10...36 DC; ("supply class 2" according to UL)
Current consumption	[mA]	< 12
Protection class		III
Reverse polarity protection		yes
Outputs		
Electrical design		PNP
Output function		normally open
Max. voltage drop switching output DC	[V]	2.5
Max. leakage current	[mA]	0.5
Permanent current rating of switching output DC	[mA]	100
Short-time current rating of switching output	[mA]	100
Switching frequency DC	[Hz]	50
Short-circuit proof		yes
Overload protection		yes
Detection zone		
Sensing range	[mm]	4
Sensing range adjustable		yes
Factory setting sensing range	[mm]	4
Accuracy / deviations		
Hysteresis	[% of Sr]	1...15
Switch point drift	[% of Sr]	-20...20

KF5014

Capacitive sensor

KFA3040BBPKG

Operating conditions			
Ambient temperature	[°C]	-25...70	
Protection		IP 65	
Tests / approvals			
EMC		EN 61000-4-2	4 kV CD / 8 kV AD
		EN 61000-4-3	3 V/m
		EN 61000-4-4	2 kV
		EN 61000-4-6	3 V
MTTF	[years]	1042	
Mechanical data			
Weight	[g]	101.3	
Housing		threaded type	
Mounting		flush mountable	
Dimensions	[mm]	M12 x 1 / L = 69	
Thread designation		M12 x 1	
Materials		housing: stainless steel; cover: PEEK	
Displays / operating elements			
Display		switching status	1 x LED, yellow
Accessories			
Items supplied		lock nuts: 2	
Remarks			
Pack quantity		1 pcs.	
Electrical connection			

Cable: 2 m, PUR; 3 x 0.34 mm²

Connection

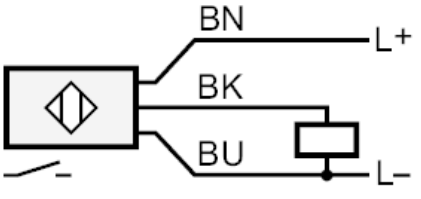

	Core colours :
BN =	brown
BU =	blue
BK =	black