Parker Hannifin Corporation
Low Pressure Connectors Europe Division
Parc Alcyone - Bat. D
1 rue André et Yvonne Meynier
CS 46911, 35069 Rennes Cedex, France
Email: webcontact@parker.com

ENGINEERING YOUR SUCCESS.

PARKER Low Pressure Connectors Europe Division
Pneumatic Banjo Fittings - LF 3000®

PART Number: 3538 12 17

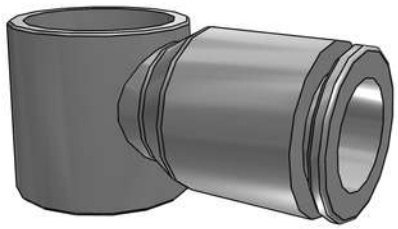

Interactive 3D graphic, click to activate and rotate
(3D capable PDF viewer required)

Technical Data	
Part Number	3538 12 17
Series Name	Pneumatic Banjo Fittings - LF 3000®
Series Code	LF3000_banjo_fittings
Division ID	A43098
Division Name	Low Pressure Connectors Europe Division
Company	Parker Hannifin

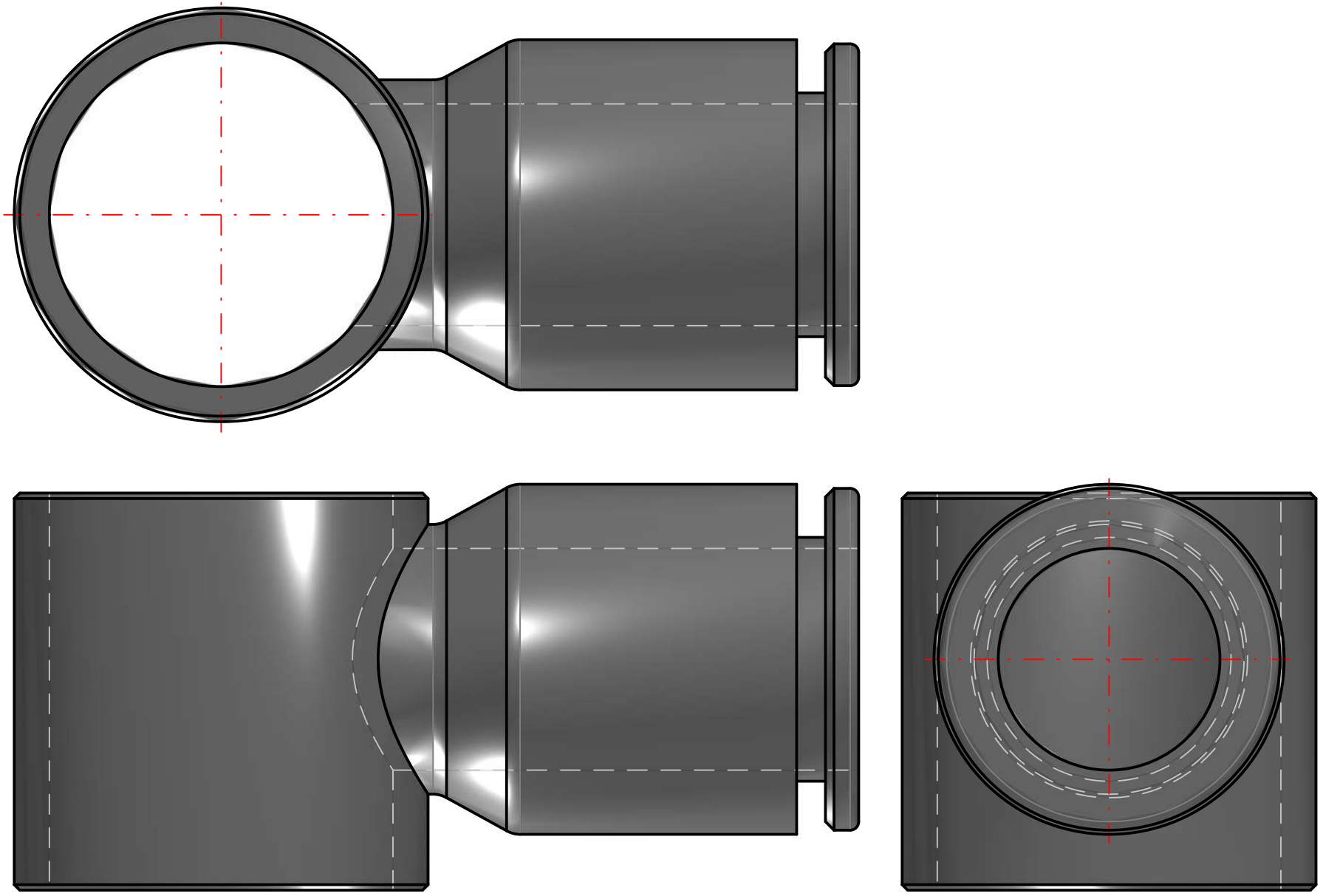

Disclaimer:

Parker Low Pressure Connectors has a continuous policy of product development and although the Company reserves the right to change specifications, it attempts to keep customers informed of any alterations. This publication is for general information only and customers are requested to contact our Sales Department for detailed information and advice on a products suitability for specific applications. All products are sold subject to the company's Standard conditions of sale.

3538 12 17

Price: contact Parker

PDF Datasheet Powered by CADENAS PARTsolutions