EBC138

Splitter box

ZDO8F039MSS0000---STGH120MSS

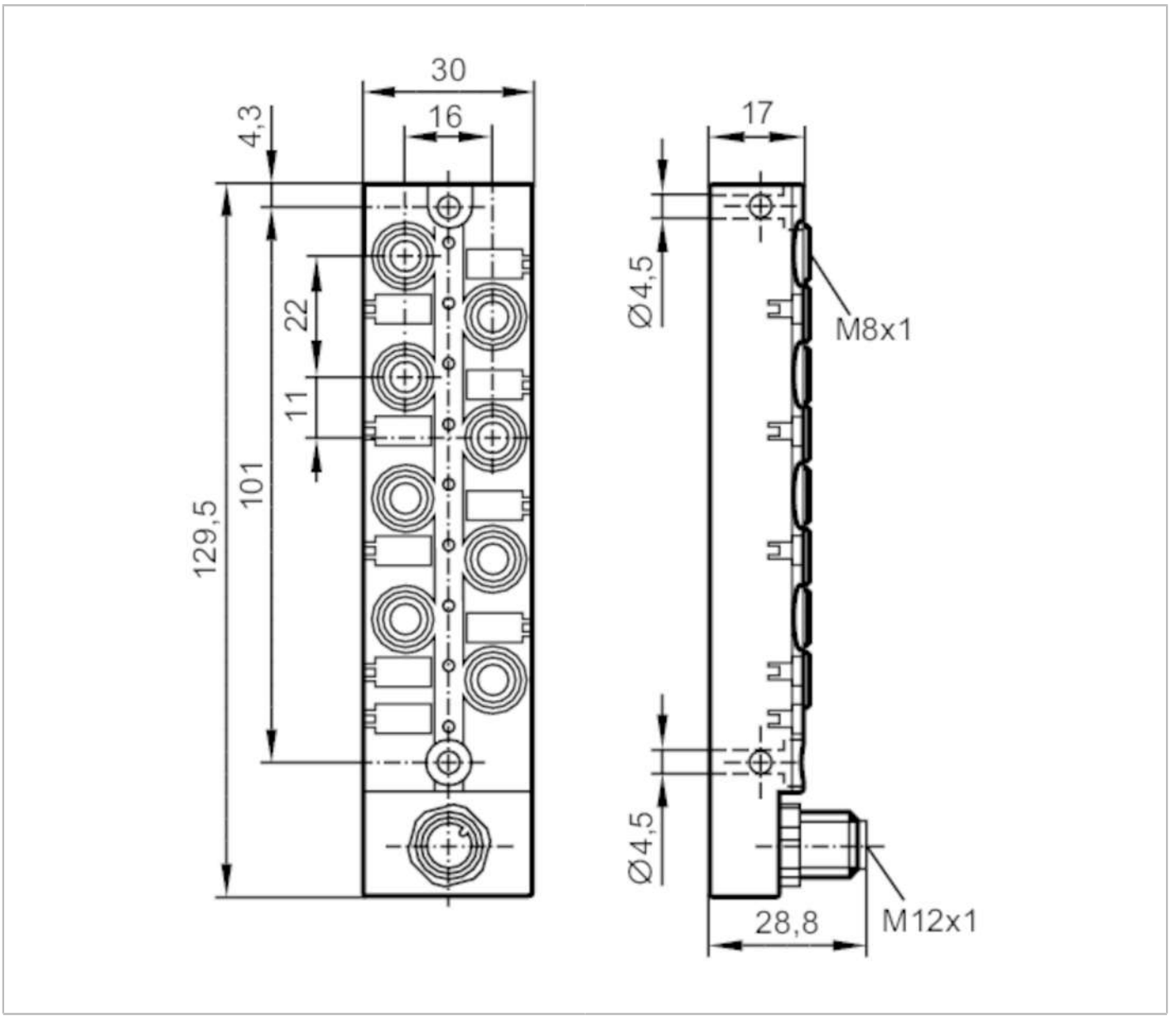

Application		
Special feature		Gold-plated contacts
Electrical data		
Operating voltage	[V]	15...30 DC; ("supply class 2" to cULus)
Protection class		III
Max. current load per module/slot	[A]	2
Max. current load total	[A]	2
Outputs		
Electrical design		PNP
Operating conditions		
Ambient temperature	[°C]	-25...80

EBC138

Splitter box

ZDO8F039MSS0000---STGH120MSS

Ambient temperature (moving)	[°C]	-5...60	
Protection		IP 67; IP 68; (1 m / 7 days)	
Mechanical data			
Weight	[g]	128.5	
Materials		PBT-GF20; brass nickel-plated	
Moulded-body material		PBT-GF 20 / brass, nickel-plated	
Number of ports splitter box		8	
Connector type		M8	
Displays / operating elements			
Display		switching status	8 x LED, yellow
		operation	1 x LED, green
Accessories			
Accessories (optional)		Protective cap: M8, E73005	
Remarks			
Pack quantity		1 pcs.	

Electrical connection - Connection

Connector: 1 x M12; Moulded body: PBT-GF 20 / brass, nickel-plated; Contacts: gold-plated; Tightening torque: 0.8...1.5 Nm

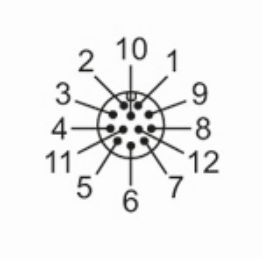

EBC138

Splitter box

ZDO8F039MSS0000---STGH120MSS

Connection

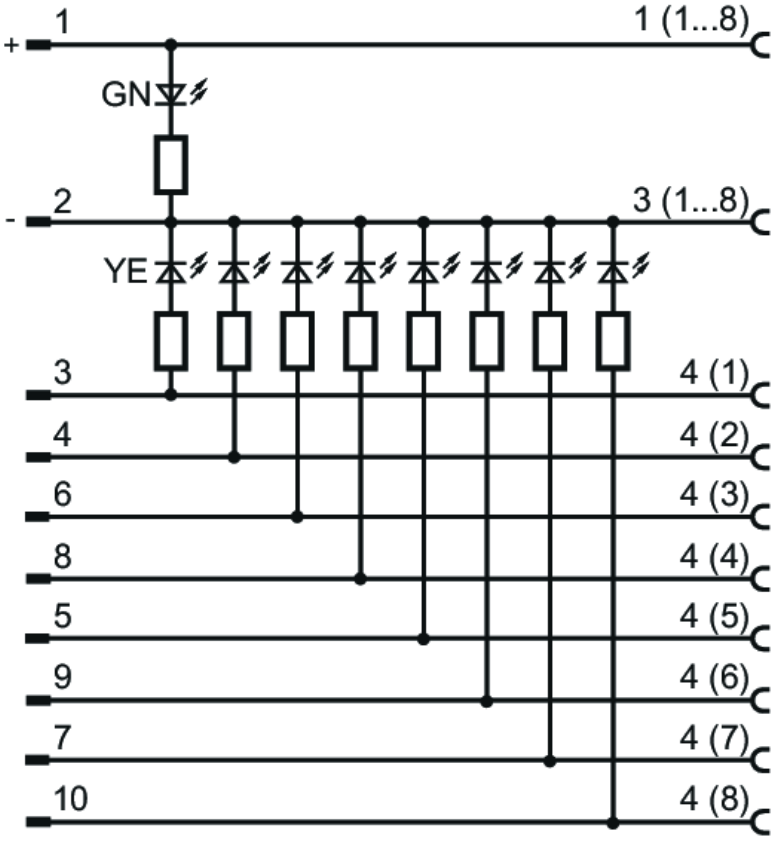

Electrical connection - slot

Connector: 8 x M8; coding: A; Moulded body: PBT-GF 20 / brass, nickel-plated; Contacts: gold-plated; Tightening torque: 0.8...1.5 Nm

