

Image may differ from product. See technical specification for details.

53309

Single direction thrust ball bearing with sphered housing washer

Single direction thrust ball bearings, with sphered housing washer, can accommodate axial loads in one direction. They must not be subjected to any radial load. Many of the components are interchangeable. The shaft washers have a ground bore that enables an interference fit. The sphered housing washers can accommodate initial misalignment when

configured correctly with a sphered seat washer or a machine component with a sphered surface.

- Separable design facilitates mounting/dismounting and maintenance inspections
- Interchangeable components
- Ground bore of shaft washers enables interference fit
- Sphered housing washers can accommodate initial misalignment

Overview

Dimensions

Bore diameter	45 mm
Outside diameter	85 mm
Height	30.1 mm
Radius of aligning surface	64 mm

Performance

Basic dynamic load rating	76.1 kN
Basic static load rating	153 kN
Reference speed	2 600 r/min
Limiting speed	3 800 r/min

Properties

Axial load capability	Single-direction
Number of rows	1
Cage	Sheet metal
Housing washer type	Sphered
Tolerance class	Normal
Material, bearing	Bearing steel
Coating	Without

Logistics

Product net weight	0.645 kg
eClass code	23-05-10-01
UNSPSC code	31171507

Technical specification

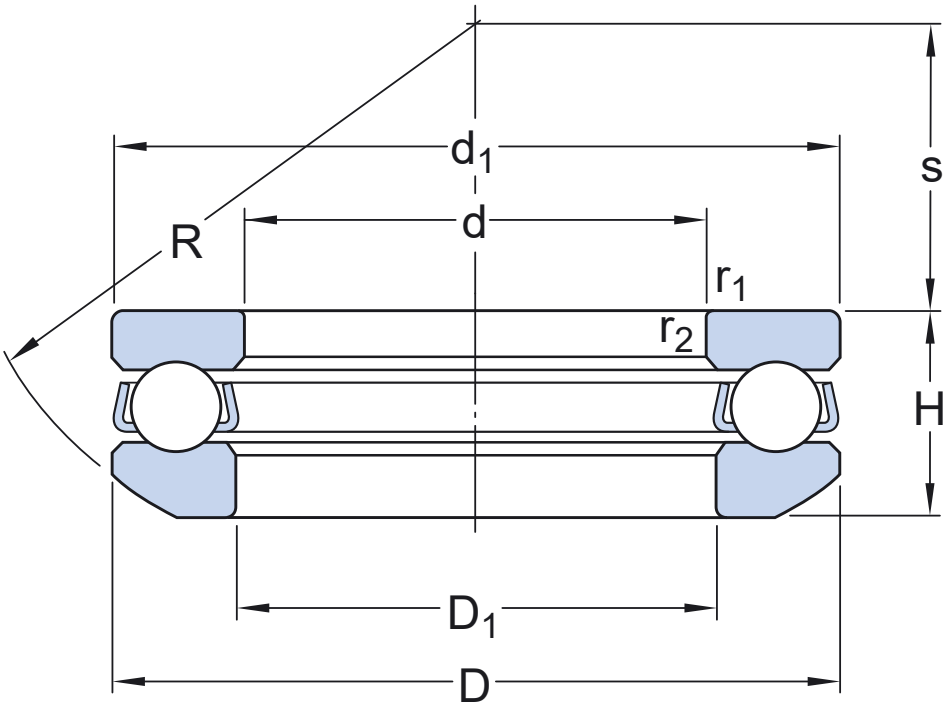

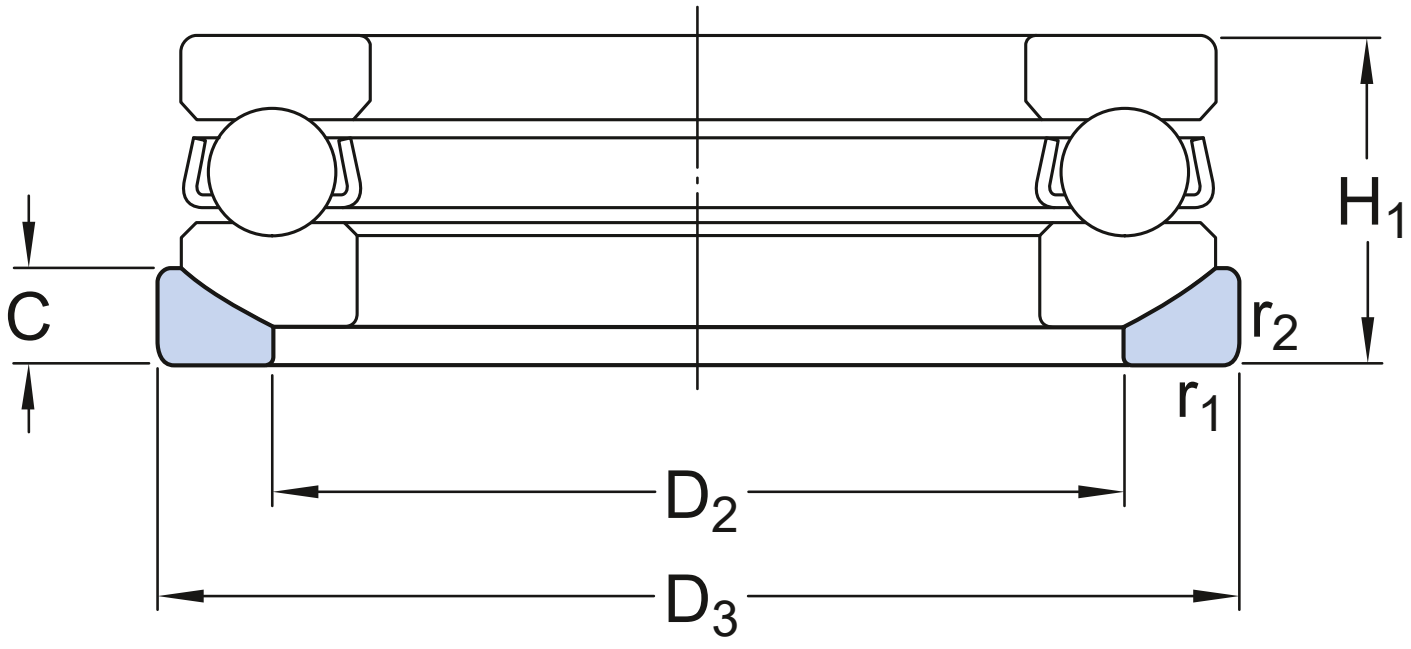

Dimensions

d	45 mm	Bore diameter
D	85 mm	Outside diameter
H	30.1 mm	Height

H_1	33 mm	Height bearing including seat washer
d_1	≈ 85 mm	Outside diameter shaft washer
D_1	≈ 47 mm	Inner diameter housing washer
D_2	65 mm	Inner diameter seat washer
D_3	90 mm	Outside diameter seat washer
C	10 mm	Height seat washer
R	64 mm	Radius sphered housing washer
s	25 mm	Centre height housing washer sphere
$r_{1,2}$	min. 1 mm	Chamfer dimension washer

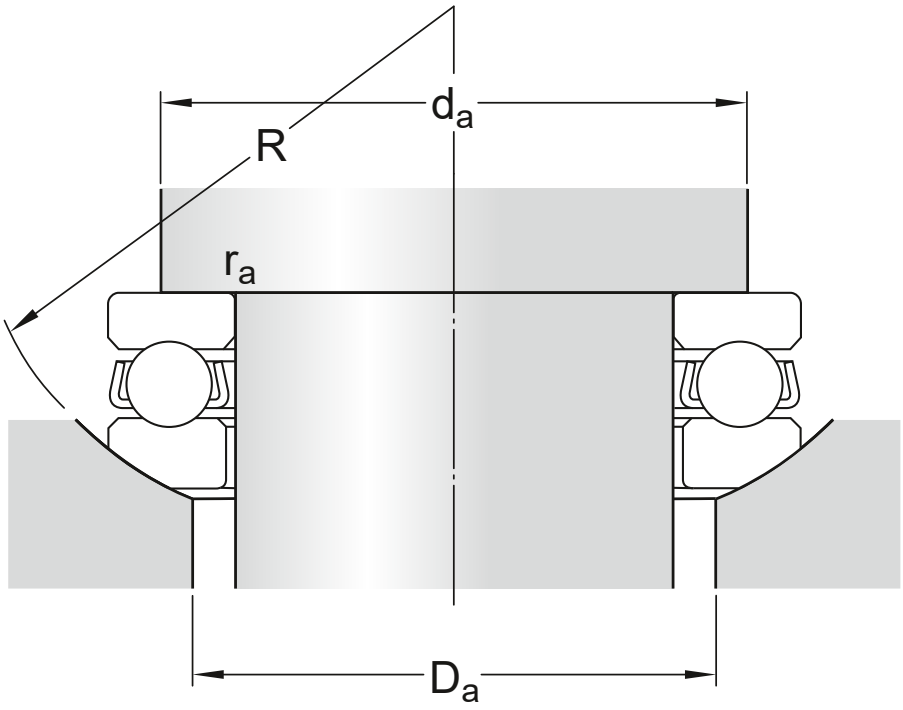



Abutment dimensions

d_a	min. 69 mm	Abutment diameter shaft
D_a	max. 65 mm	Abutment diameter housing
r_a	max. 1 mm	Fillet radius

Calculation data

Basic dynamic load rating	C	76.1 kN
Basic static load rating	C_0	153 kN
Fatigue load limit	P_u	5.6 kN
Reference speed		2 600 r/min
Limiting speed		3 800 r/min
Minimum load factor	A	0.12

Associated products

Seat washer	U 309

Tolerances and clearances

GENERAL BEARING SPECIFICATIONS

- Tolerances: table 1

BEARING INTERFACES

- Seat tolerances for standard conditions
- Tolerances and resultant fit

Compatible products

Recommended product

Sphered seat washer for thrust ball bearings	U 309

More Information

Product details

- Designs and variants
- General bearing specifications
- Loads
- Temperature limits
- Permissible speed
- Mounting
- Designation system

Engineering information

- Principles of rolling bearing selection
- General bearing knowledge
- Bearing selection process
- Bearing interfaces
- Seat tolerances for standard conditions
- Lubrication
- External sealing, mounting and dismounting
- Bearing failure and how to prevent it

Tools

- SKF Product select
- Bearing Frequency Calculator
- SimPro Quick
- LubeSelect for SKF greases
- Heater selection tool

Terms of use

By accessing and using this website / app owned and published by AB SKF (publ.) (556007-3495 · Gothenburg) (“SKF”), you agree to the following terms and conditions:

Warranty Disclaimer and Limitation of Liability

Although every care has been taken to assure the accuracy of the information on this website / app, SKF provides this information "AS IS" and DISCLAIMS ALL WARRANTIES, EXPRESS OR IMPLIED, INCLUDING, BUT NOT LIMITED TO, IMPLIED WARRANTIES OF MERCHANTABILITY AND FITNESS FOR A PARTICULAR PURPOSE. You acknowledge that your use of this website / app is at your sole risk, that you assume full responsibility for all costs associated with use of this website / app, and that SKF shall not be liable for any direct, incidental, consequential, or indirect damages of any kind arising out of your access to, or use of the information or software made available on this website / app.

Any warranties and representations in this website / app for SKF products or services that you purchase or use will be subject to the agreed upon terms and conditions in the contract for such product or service.

Further, for non-SKF websites / apps that are referenced in our website / app or where a hyperlink appears, SKF makes no warranties concerning the accuracy or reliability of the information in these websites / apps and assumes no responsibility for material created or published by third parties contained therein. In addition, SKF does not warrant that this website / app or these other linked websites / apps are free from viruses or other harmful elements.

Third Party Services

When viewing YouTube content via the SKF website(s) (i.e. using YouTube API Services), you agree to be bound by the YouTube Terms of Service.

Copyright

Copyright in this website / app copyright of the information and software made available on this website / app rest with SKF or its licensors. All rights are reserved. All licensed material will reference the licensor that has granted SKF the right to use the material. The information and software made available on this website / app may not be reproduced, duplicated, copied, transferred, distributed, stored, modified, downloaded or otherwise exploited for any commercial use without the prior written approval of SKF. However, it may be reproduced, stored and downloaded for use by individuals without prior written approval of SKF. Under no circumstances may this information or software be supplied to third parties.

This website /app includes certain images used under license from Shutterstock, Inc.

Trademarks and Patents

All trademarks, brand names, and corporate logos displayed on the website / app are the property of SKF or its licensors, and may not be used in any way without prior written approval by SKF. All licensed trademarks published on this website / app reference the licensor that has granted SKF the right to use the trademark. Access to this website / app does not grant to the user any license under any patents owned by or licensed to SKF.

Changes

SKF reserves the right to make changes or additions to this website / app at any time.