Level Pressure Flow Temperature Analytics Registration Systems Components Services Solutions

Technical Information

Memosens measuring cable and installation accessories

CYK10 / CYK11



Application

Measuring cable for all Memosens sensors and sensors with Memosens technology for nearly all parts of process engineering.

- The Memosens data cable CYK10 is used with sensors utilizing the contactless inductive signal transmission.
- The Memosens extension cable CYK11 is used for the connection of digital fixed-cable sensors with Memosens protocol. The following versions are available: Ferrule with ferrule, M12 female connector with ferrule and M12 female connector with M12 plug. CYK10 based installations can also be extended with CYK11.
- CYK10 and CYK11 can be extended with junction boxes.
- CYK10 available in versions for use in hazardous areas

Your benefits

- Memosens data cable CYK10
  - Absolute waterproof connection (ingress protection IP 68)
  - No corrosion of contacts
  - No influence of interfering potentials thanks to galvanic isolation of transmitter and medium
- Memosens extension cable CYK11
  - Absolute waterproof connection (ingress protection IP 68)
  - Flexible and fast in application

TI00118C/07/EN/13.11
71139045

Endress+Hauser
People for Process Automation

Function and system design

Measuring system

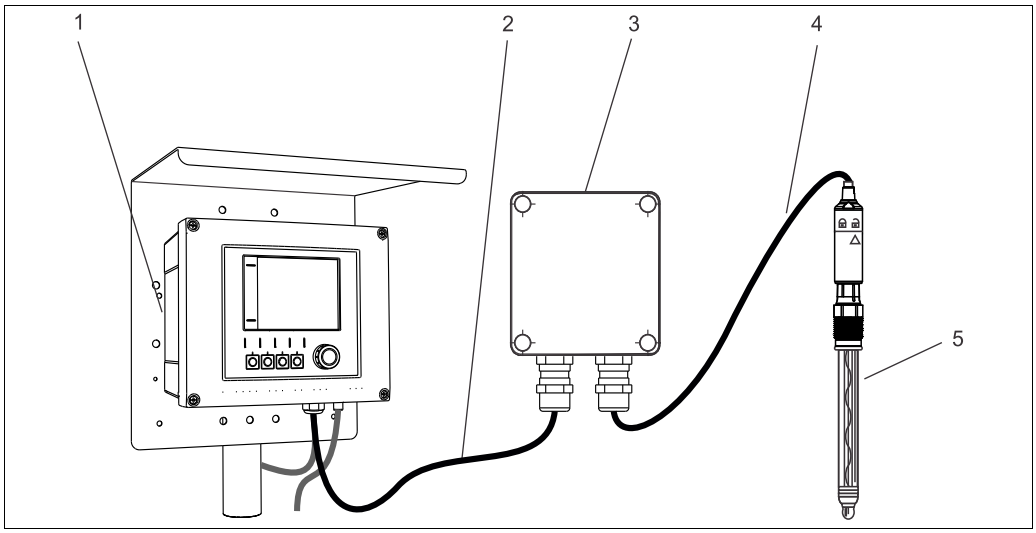

Measuring system

1 Transmitter
2 Memosens extension cable CYK11 (optional)
3 Junction box (optional)
4 Memosens data cable CYK10 or fixed cable
5 Sensor

Memosens

Memosens makes your measuring point safer and more reliable:
- Non-contact, digital signal transmission enables optimum galvanic isolation
- No contact corrosion
- Completely watertight
- Laboratory sensor calibration possible, thus increasing measured value availability
- Predictive maintenance thanks to recording of sensor data, e.g.:
  - Total hours of operation
  - Hours of operation with very high or very low measured values
  - Hours of operation with high temperatures
  - Number of steam sterilizations
  - Sensor condition

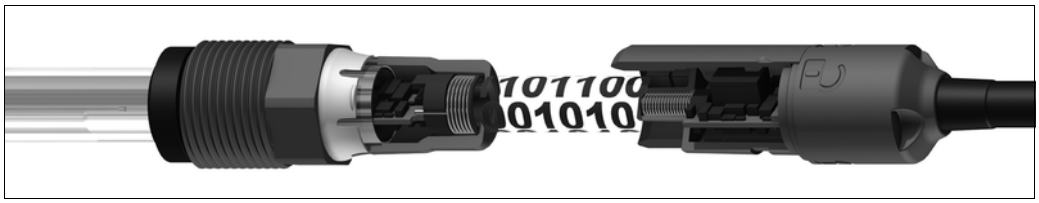

Connection in explosion-hazardous areas

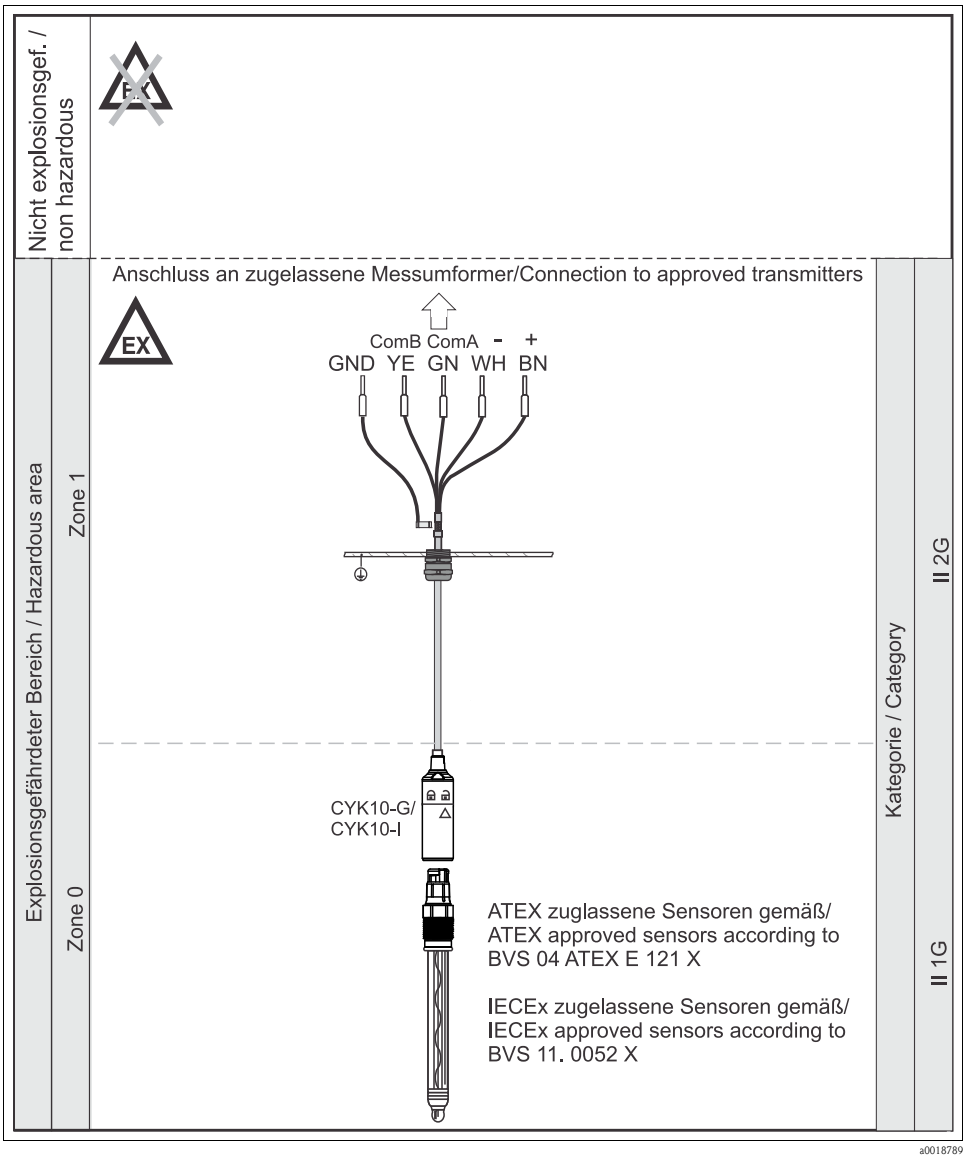

Connection in explosion-hazardous areas

It is not allowed to use CYK11 as an extension for CYK10-based measuring system in hazardous areas. For hazardous areas it is recommended to use continuous and not extended Memosens measuring cable CYK10.

Cable specification

	CYK10	CYK11
Conductor/Construction	4 cores	6 cores
Outer diameter (mm)	6,3	6,3
Shielding	Yes	Yes
Bending radius solid	5xD	5xD
Bending radius flexible	10xD	10xD

Performance characteristics

Resistance

	CYK10	CYK11
UV resistant	Yes	Yes
Clear of ozon-depleting substances	Yes	Yes
Halogen-free	No	Yes
RoHs-compliant	Yes	Yes
Flame-resistant	Yes	Yes
Oil-resistant	-	Yes

Environment

Ambient temperature range

	CYK10	CYK11
Temperature min.	-25 °C (-13 °F)	-30 °C (-22 °F)
Temperature max.	135 °C (277 °F)	90 °C (194 °F)

Degree of protection

- Memosens data cable CYK10: IP 68 (Memosens: 1 bar (15 psi), 25 °C (77 °F), 1 mol/l KCl, 45 days; M12: 0.1 bar (2 psi), 50 °C (131 °F), 3 mol/l KCl, 30 days)
- Memosens extension cable CYK11: IP 68 (M12: 0.1 bar (2 psi), 50 °C (131 °F), 3 mol/l KCl, 30 days) in mated condition

Mechanical construction: Measuring cable for digital sensors

CYK10 for digital sensors with Memosens technology

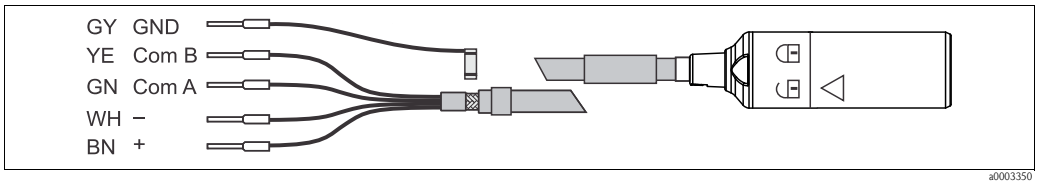

a0003350

Instead of GY you can also ground over the cable clamp in the transmitter.

CYK10 with M12 plug

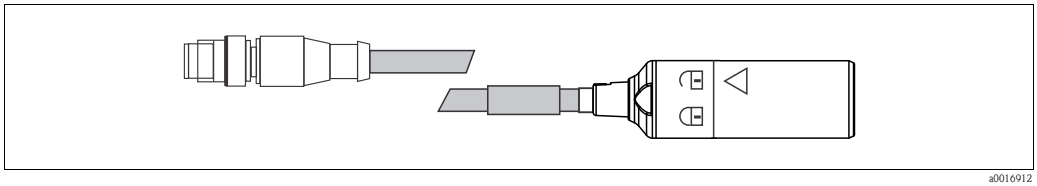

a0016912

CYK11

CYK11 with ferrules

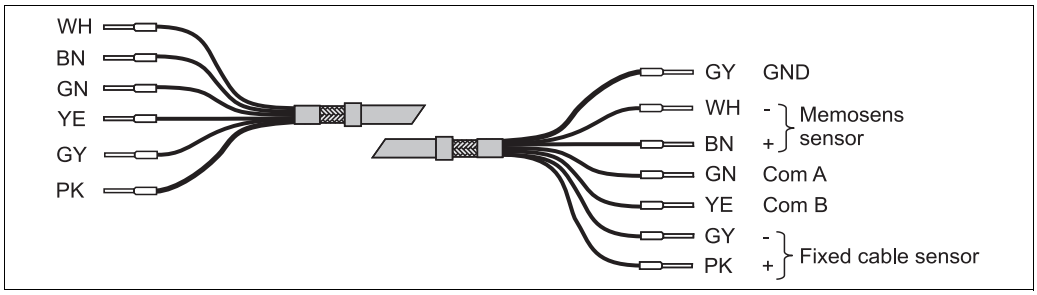

CYK11 with ferrule and M12 female connector

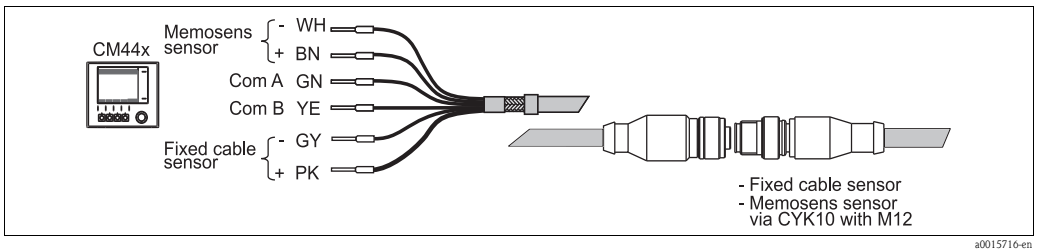

CYK11 with M12 plug and M12 female connector

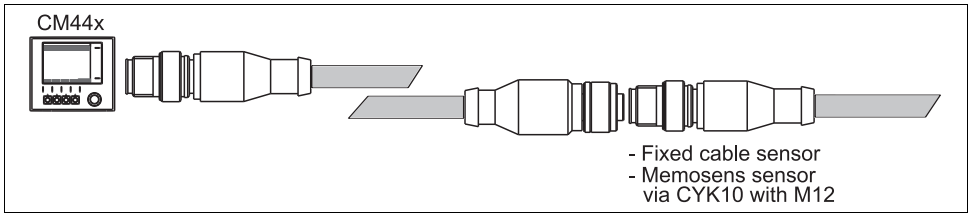

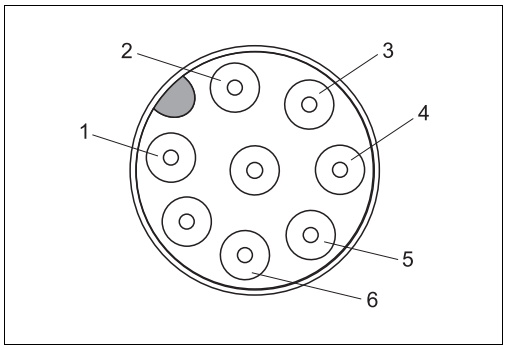

Assignment M12 plug

1 $V_{Fixed\ cable\ sensor}$ *(+24 V) (PK)*
2 $GND_{Fixed\ cable\ sensor}$ *(GY)*
3 $V_{Memosens\ sensor}$*(BN)*
4 $GND_{Memosens\ sensor}$ *(WH)*
5 *RS 485 A (GN)*
6 *RS 485 B (YE)*

Material CYK10 and CYK11

	CYK10	CYK11
Cable sheath	TPE	TPE

Mechanical construction: Plug and junction box

CYK11 junction box

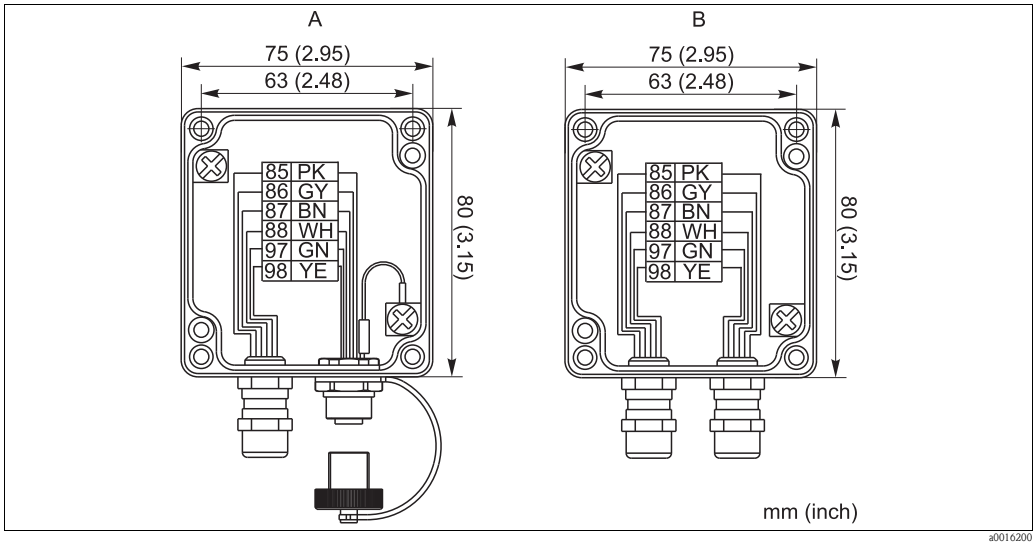

Variants of CYK11 junction box

A Junction box M12 connector/cable
B Junction box cable/cable

Material

Junction box: aluminum

Certificates and approvals

CE mark

Declaration of Conformity
The product meets the requirements of harmonized European standards.It therefore meets the legal specifications of EU guidelines.The manufacturer confirms that the product has been successfully tested by applying the 4 mark.

Ex approval

CYK10-Ga, a = 1, 2**
CYK10-Ia, a = 1, 2**

- **IECEx**
  Ex ia IIC T3/T4/T6 Ga
- **ATEX**
  II 1G Ex ia IIC T3/T4/T6 Ga
- **FM/CSA**
  IS/NI CLI Div1&2 GP ABCD
- **Nepsi**
  II 1G Ex ia IIC T3/T4/T6 Ga

Ordering information

Product structure

You can create a valid and complete order code using the Endress + Hauser Configurator tool on the Internet.

Enter the following addresses in your browser to access the relevant product page:
www.products.endress.com/cyk10
www.products.endress.com/cyk11

1. The following options are available on the right-hand side of the page:

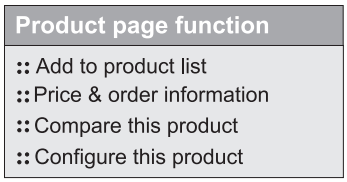

2. Select "Configure this product".
3. A new window opens with the Configurator. Using this tool, you can configure your device and you will receive a valid and complete order code for this.
4. Then export the order code as a PDF or as an Excel file selecting from the buttons provided at the top of the page.

Junction box

Junction box M12 connector/cable
- Material: aluminum, painted
- Cable extension: Memosens sensors, Liquiline
- Order no. 71145498

Junction box cable/cable
- Material: aluminum, painted
- Cable extension: Memosens sensors, Liquiline
- Order no. 71145499

Instruments International

Endress+Hauser
Instruments International AG
Kaegenstrasse 2
4153 Reinach
Switzerland

Tel.+41 61 715 81 00
Fax+41 61 715 25 00
www.endress.com
info@ii.endress.com

Endress+Hauser

People for Process Automation

TI00118C/07/EN/13.11
71139045