L64★ - ★★P - ★★N

Operation
C ....Oil-Fog
M ...Micro-Fog

Port
2.....1/4"
3.....3/8"
4.....1/2"
6.....3/4"

Thread
A ....PTF
B ....ISO R_C taper
G ....ISO G parallel
N ....No thread (basic unit)

Drain
M ...Manual
E.....No drain (Closed bowl)
Q ....Manual 1/4 turn
R ....Remote fill

Bowl/Reservoir
A ....optional 1 litre (1 quart US) metal
D ....Metal
P ....Transparent with guard
R ....Metal with Pyrex liquid level indicator

TECHNICAL DATA

Fluid: Compressed air
Maximum pressure:
Guarded transparent bowl: 10 bar (150 psig)
Metal bowl: 17 bar (250 psig)
Operating temperature*:
Transparent bowl: –20° to +50°C (0° to +125°F)
Metal bowl: –20° to +80°C (0° to +175°F)
* Air supply must be dry enough to avoid ice formation at temperatures below +2°C (+35°F).
Start point (minimum flow required for lubricator operation) at 6,3 bar (90 psig) inlet pressure:
1,5 dm^3/s (3.2 scfm)
Nominal bowl capacity: 0,2 litre (7 fluid oz), standard
1 litre (1 quart US), optional
Materials:
Body: Zinc
Bowl:
Metal: Aluminium
Transparent, optional: Polycarbonate
Metal bowl liquid level indicator lens, standard: Grilamid
Metal bowl sight glass, optional (standard on 1 litre bowl): Pyrex
Sight dome: Polycarbonate
Elastomers: Synthetic rubber

REPLACEMENT ITEMS

Service kit, contains required items circled: 4382-200
Prismatic sight glass.....4380-042
Pyrex sight glass.....4380-041
Pyrex sight glass, 1 litre bowl.....2273-22
Manual drain 684-84

INSTALLATION

1. Install unit vertically in air line -
   - vertically (bowl down),
   - with air flow in direction of arrow on body,
   - upstream of cycling valves
   - as close as possible to the device being lubricated,
   - Oil-Fog Models - Not more than 5,2m (15 feet) from the device being lubricated, and at the same height or higher than the device.
2. Before assembling the basic unit into the yoke the port seal o-rings should be lightly smeared with o-ring grease.
3. Locate clamp ring under lugs on top of yoke, offer basic unit into yoke with directional arrows correctly aligned (an interference fit prevents assembly if misaligned) before engaging and fully tightening the clamp ring.
4. Turn bowl or bowl guard fully clockwise into body before pressurizing. Lock symbols on body and bowl guards must align.

RECOMMENDED LUBRICANTS

Fill reservoir with a good quality, light, misting type oil for compressed air tools. See our publication N/AL.8.900.935. Fill to maximum fill line on transparent reservoirs. Oil level must always be visible in lens on metal reservoirs. Do not overfill.

FILL RESERVOIR (OIL-FOG LUBRICATORS)

Remove fill plug (1), add oil, and reinstall fill plug. Fill plug can be removed and oil added without shutting off air pressure to the lubricator.

FILL RESERVOIR (MICRO-FOG LUBRICATORS)

Shut off inlet air pressure and reduce pressure in reservoir to zero. Remove fill plug (1), add oil, and reinstall fill plug. **Do not remove the fill plug when the reservoir is pressurized, as oil will blow out the fill plug hole.**

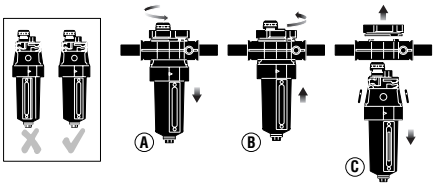

ADJUSTMENT

1. Turn on system pressure.
2. Adjust lubricator drip rate only when there is a constant rate of air flow through the lubricator. Monitor drip rate through sight feed dome (3).
3. **Oil-Fog Lubricators** - Determine the average rate of flow through the lubricator. Turn green knob (3) to obtain one drop per minute for each 5 dm^3/s (10 scfm). For example, if the average flow is 19 dm^3/s (40 scfm), set the drip rate at 4 drops per minute. Turn knob counterclockwise to increase and clockwise to decrease the drip rate. The oil feed setting can be locked by pushing the lock ring down, this must be released before adjustment by pulling up.
4. **Micro-Fog Lubricators** - Oil drip rate is adjusted by the red knob above the sight-feed dome, counterclockwise to increase and clockwise to decrease the drip rate. The rate changes automatically to compensate for flow variations. The oil feed setting can be locked by pushing the lock ring down, this must be released before adjustment by pulling up.
   See Drip Rate Chart. Turn knob counterclockwise to increase and clockwise to decrease the drip rate.

Drip Rate Chart for Micro-Fog Lubricators

Flow - dm^3/s (scfm)	Drops per Minute
2,4 (5)	10
5 (10)	11
9 (20)	13
14 (30)	15
19 (40)	17
24 (50)	19
28 (60)	22
34 (70)	24
38 (80)	26
43 (90)	28
48 (100)	30

5. Monitor the device being lubricated for a few days following initial adjustment. Adjust the drip rate if the oil delivery at the device appears either excessive or low.

DISASSEMBLY

1. Shut off inlet pressure. Reduce pressure in inlet and outlet lines to zero. Loosen fill plug (1).
2. Remove reservoir - push into body and turn counterclockwise.
3. Disassemble in general accordance with the item numbers on exploded view. Do not remove the manual drain unless replacement is necessary. Remove and replace drain assembly only if drain malfunctions. Do not remove syphon tube (53). Remove and replace items 54 through 59 only if lubricator malfunctions.

CLEANING

1. Clean plastic reservoir with warm water only. Clean other parts using warm water and soap.
2. Dry parts. Blow out internal passages in body with clean, dry compressed air.
3. Inspect parts. Replace parts found to be damaged. If plastic reservoir shows signs of cracking or cloudiness, replace with a metal reservoir.

ASSEMBLY

1. Lubricate o-rings, the portion of the manual drain body (19, 33) that contacts the bowl, and the hole in the manual drain body that accommodates the stem of drain valve (20, 34) with o-ring grease.
2. Assemble lubricator as shown on exploded view.
3. Assemble the 1 litre (1 quart) liquid indicator parts (69 through 74) to reservoir. Apply a 0,9 to 1,8 kg (2 to 4 pound) clamping force to upper and lower sight glass brackets (70). Tighten screws (69).

Torque Table	N-m (Inch-Pounds)
3 (Dome)	2,3 to 2,8 (20 to 25)
43 (Screw)	1,7 to 2,3 (15 to 20)
55 (Screw)	1,1 to 1,6 (10 to 14)
69 (Screw)	0,9 to 1,1 (8 to 10)

4. Push reservoir, or reservoir with guard, into body and turn fully clockwise.

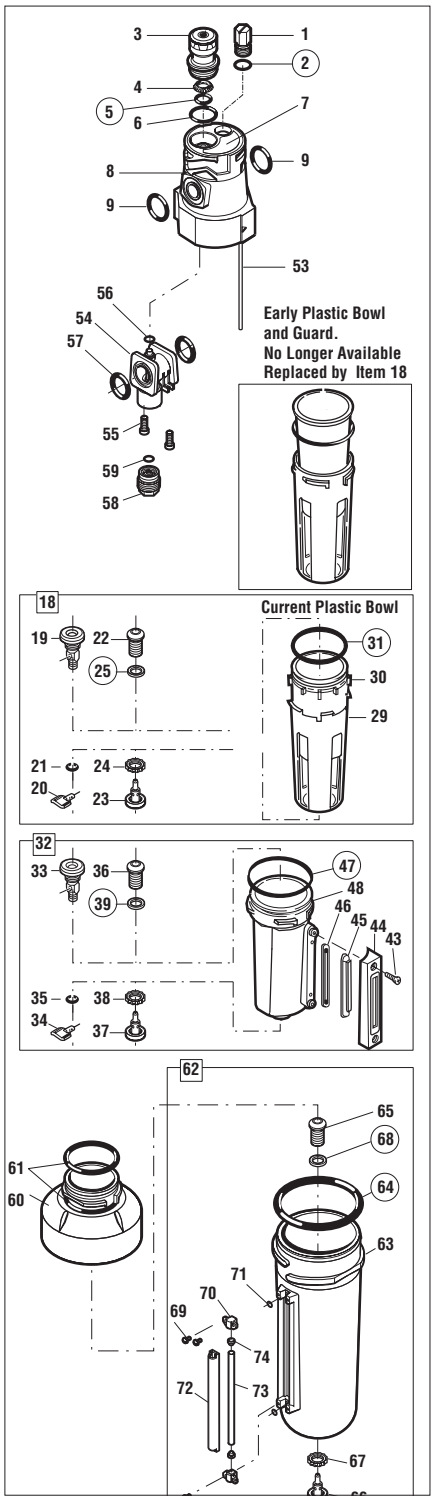

.....continued over

Our policy is one of continued research and development. We therefore reserve the right to amend, without notice, the specifications given in this document. © 1999 Norgren, Inc.

WARNING

These products are intended for use in industrial compressed air systems only. Do not use these products where pressures and temperatures can exceed those listed under **Technical Data**.

Polycarbonate plastic bowls can be damaged and possibly burst if exposed to such substances as certain solvents, strong alkalies, compressor oils containing ester-based additives or synthetic oils. Fumes of these substances in contact with the polycarbonate bowl, externally or internally, can also result in damage. Clean with warm water only.

Use metal bowl in applications where a plastic bowl might be exposed to substances that are incompatible with polycarbonate.

Before using these products with fluids other than air, for non industrial applications, or for life-support systems consult IMI Precision Engineering.

Our policy is one of continued research and development. We therefore reserve the right to amend, without notice, the specifications given in this document. © 1999 Norgren, Inc.