O4H201

Diffuse reflection sensor with background suppression

O4H-DPKG/US100

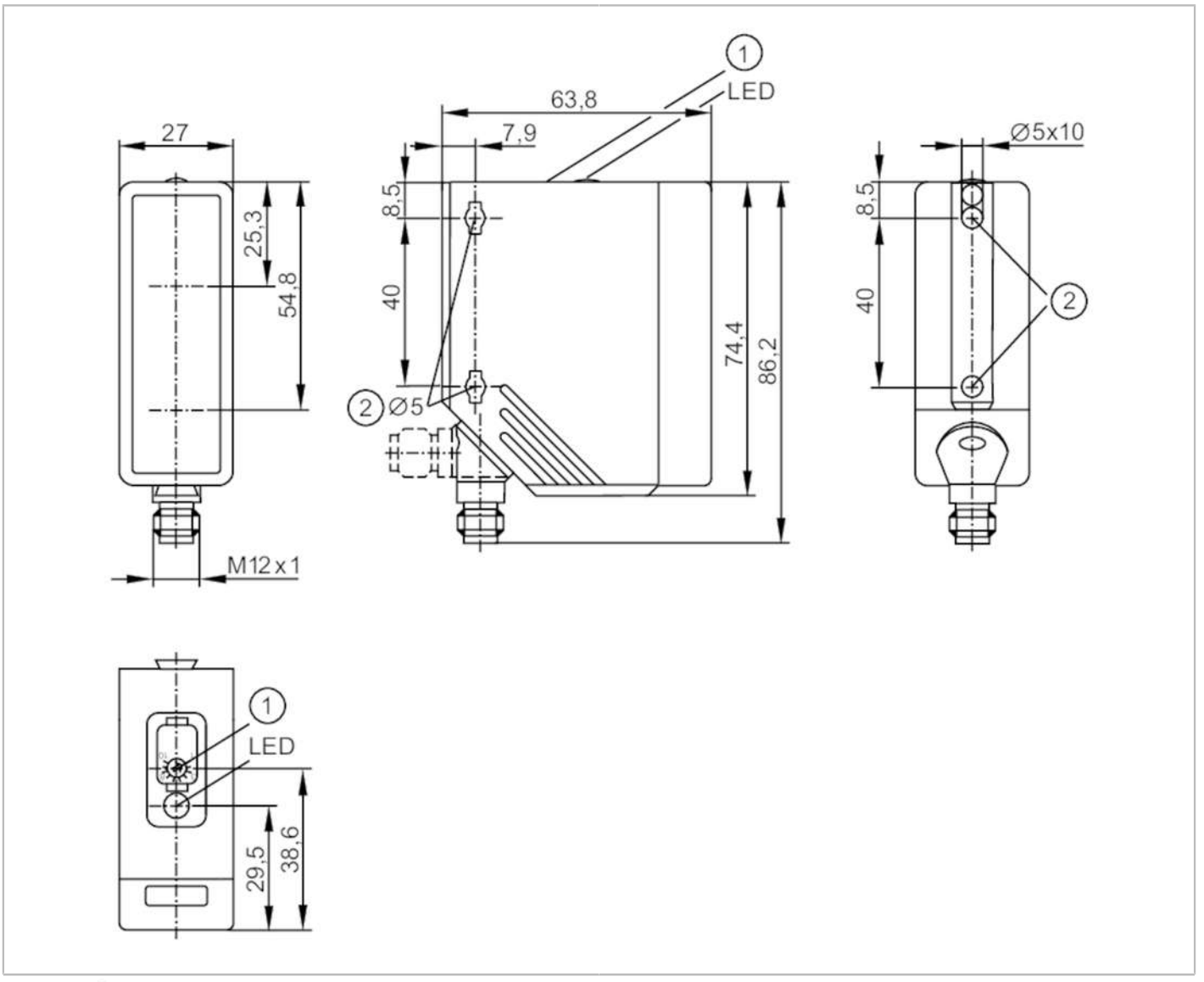

Product characteristics		
Type of light		red light
Housing		rectangular
Application		
Special feature		Background suppression
Function principle		Diffuse reflection sensor
Electrical data		
Operating voltage	[V]	10...36 DC; ("supply class 2" to cULus)
Current consumption	[mA]	25
Protection class		II
Reverse polarity protection		yes
Type of light		red light
Wave length	[nm]	624

O4H201

Diffuse reflection sensor with background suppression

O4H-DPKG/US100

Outputs			
Electrical design		PNP	
Output function		dark-on mode	
Max. voltage drop switching output DC	[V]	2.5	
Permanent current rating of switching output DC	[mA]	200	
Switching frequency DC	[Hz]	1000	
Short-circuit protection		yes	
Type of short-circuit protection		pulsed	
Overload protection		yes	
Detection zone			
Range	[mm]	100...2000; (white paper 200 x 200 mm 90% remission)	
Range on white object (90 % remission)	[mm]	100...2000	
Range on grey object (18 % remission)	[mm]	100...1100	
Range on black object (6 % remission)	[mm]	100...700	
Range adjustable		yes	
Max. light spot diameter	[mm]	100	
Light spot dimensions refer to		at maximum range	
Background suppression available		yes	
Operating conditions			
Ambient temperature	[°C]	-25...60	
Protection		IP 65	
Tests / approvals			
EMC		EN 60947-5-2	
MTTF	[years]	326	
Mechanical data			
Weight	[g]	121.5	
Housing		rectangular	
Dimensions	[mm]	74.4 x 27 x 63.8	
Materials		housing: PA; bezel: stainless steel; operator interface: TPE / PC	
Lens material		PMMA	
Lens alignment		side lens	
Displays / operating elements			
Display		switching status	1 x LED, yellow
Operating elements			potentiometer
Remarks			
Pack quantity		1 pcs.	

O4H201

Diffuse reflection sensor with background suppression

O4H-DPKG/US100

Electrical connection

Connector: 1 x M12; coding: A

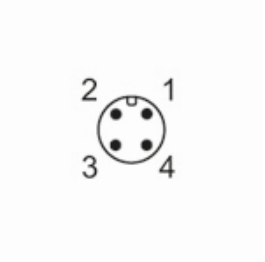

Connection

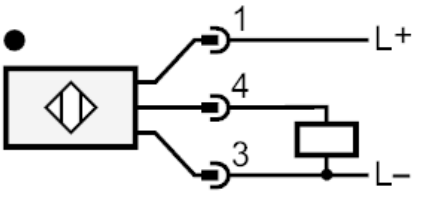

Diagrams and graphs

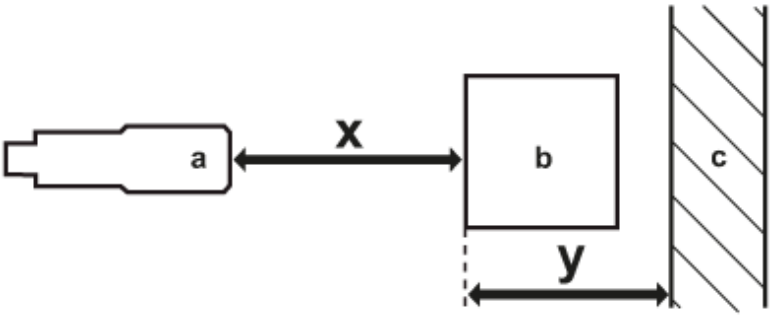

a: sensor

b: object

c: background

x: distance sensor/object [mm]

y: min. distance object/background [mm]

O4H201

Diffuse reflection sensor with background suppression

O4H-DPKG/US100

accuracy graph

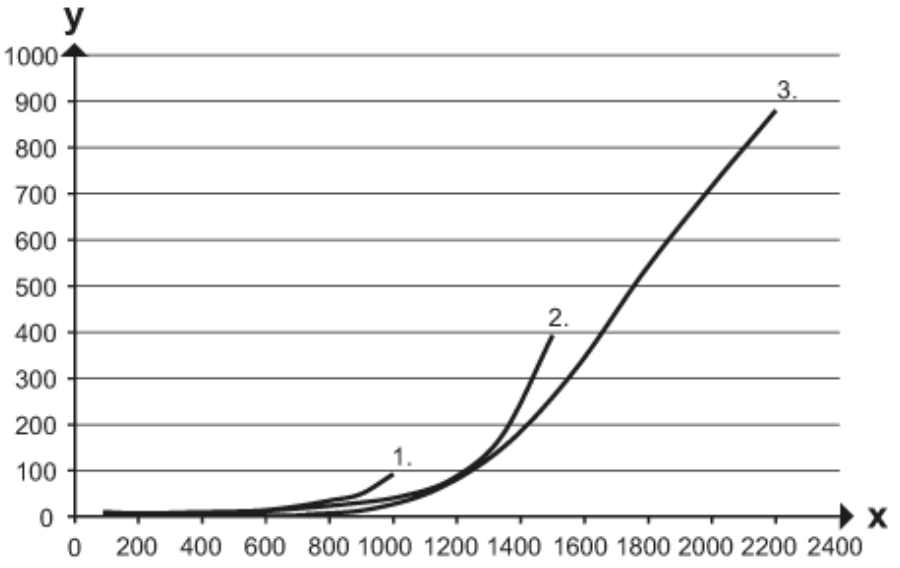

x: distance sensor/object [mm]

y: min. distance object/background [mm]

1 = object black (6 % remission) , background white (90 % remission)

2 = object grey (18 % remission) , background white (90 % remission)

3 = object white (90 % remission) , background white (90 % remission)