ID5072

Inductive sensor

IDC4050BCPKG/F/2LED/US-100-DPA

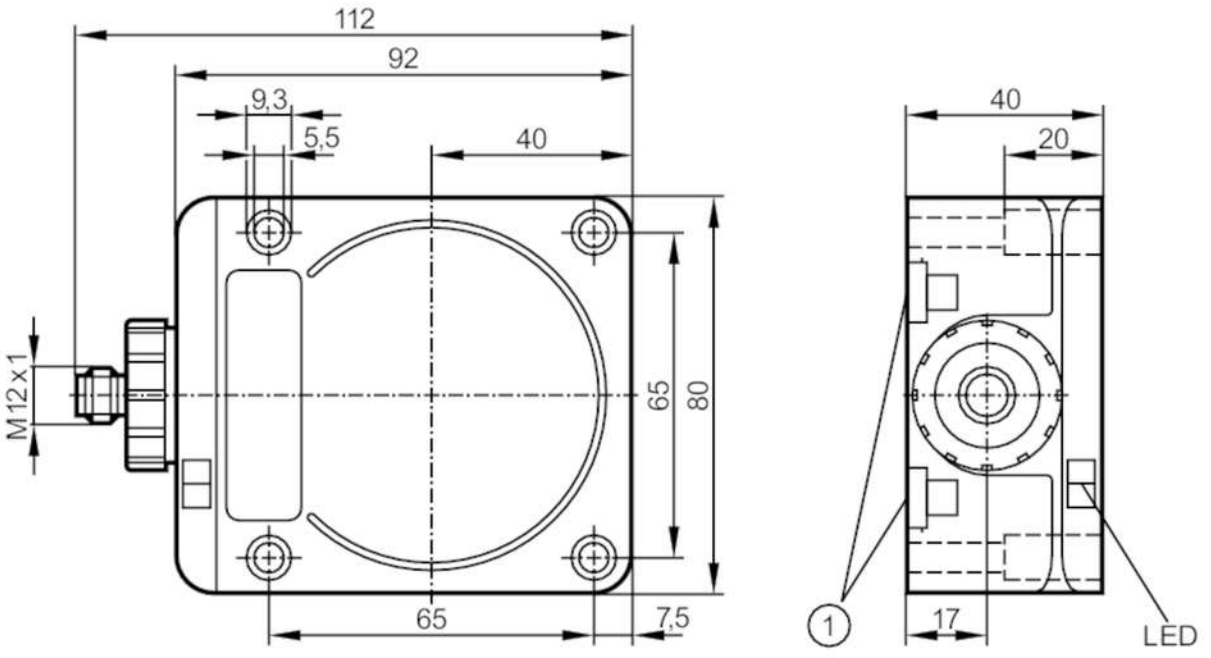

1 mounting on DIN rail

Product characteristics		
Electrical design		PNP
Output function		complementary
Sensing range	[mm]	50
Housing		rectangular
Dimensions	[mm]	92 x 80 x 40
Electrical data		
Operating voltage	[V]	10...36 DC
Current consumption	[mA]	20; (24 V)
Protection class		II
Reverse polarity protection		yes
Outputs		
Electrical design		PNP
Output function		complementary
Max. voltage drop switching output DC	[V]	2.5
Permanent current rating of switching output DC	[mA]	250
Switching frequency DC	[Hz]	70
Short-circuit protection		yes
Type of short-circuit protection		pulsed
Overload protection		yes
Detection zone		
Sensing range	[mm]	50

ID5072

Inductive sensor

IDC4050BCPKG/F/2LED/US-100-DPA

Real sensing range Sr	[mm]	50; (mounted flush with mild steel (ST37))
Operating distance	[mm]	0...40.5; (mounted flush with mild steel (ST37); non flush: operating distance reduced by max. 5.5 mm)
Accuracy / deviations		
Correction factor		steel: 1 / stainless steel: 0.85 / brass: 0.48 / aluminium: 0.46 / copper: 0.38
Hysteresis	[% of Sr]	3...20
Switch point drift	[% of Sr]	-15...15
Operating conditions		
Ambient temperature	[°C]	-25...70
Protection		IP 67
Tests / approvals		
EMC		EN 60947-5-2
Mechanical data		
Weight	[g]	423.5
Housing		rectangular
Mounting		flush mountable
Type of mounting		rail; (TH35 (EN 60715))
Dimensions	[mm]	92 x 80 x 40
Materials		PPE black; brass white bronze coated; diecast zinc
Displays / operating elements		
Display		switching status: 1 x LED, yellow operation: 1 x LED, green
Accessories		
Items supplied		sealing plug: 1
Remarks		
Pack quantity		1 pcs.
Electrical connection - plug		

Connector: 1 x M12; coding: A



ID5072

Inductive sensor

IDC4050BCPKG/F/2LED/US-100-DPA

Connection

