Max. 61 m³/h

DC centrifugal fans

97 x 93.5 x 33 mm



- **Material:** Scroll housing: GRP[1)]
  Impeller: GRP[1)]
- **Direction of air flow:** Axial: Intake,
  Centrifugal: Exhaust
- **Connection:** via single wires AWG 26, TR 64
- **Highlights:** Forward-curved impeller
- **Weight:** 170 g

- **Possible special versions:**
  (See chapter DC fans - specials):
  - Speed signal
  - Go / NoGo alarm
  - Alarm with speed limit
  - External temperature sensor
  - Internal temperature sensor
  - PWM control input
  - Analog control input
  - Moisture protection

1) Fiberglass-reinforced plastic

Series RL 65 VHS0065XUFBS **Nominal data**	Air flow	Air flow	**Nominal voltage**	Voltage range	Sound power level	Sintec sleeve bearings Ball bearings	Power consumption	Nominal speed	Temperature range	Service life L_{10} (40 °C) ebm-papst standard Service life L_{10} (T_{max}) ebm-papst standard	Life expectancy L_{10IPC} (40 °C) see page 15	Curve
Type	**m³/h**	**cfm**	**VDC**	**VDC**	**Bel(A)**	**□/■**	**Watts**	**rpm⁻¹**	**°C**	**Hours**	**Hours**	
RL 65-21/12	56	32.9	**12**	6.8...13.8	6.6	■	15.0	4 500	-20...+70	60 000 / 30 000	102 500	①
RL 65-21/12 H	61	35.8	**12**	6.8...13.2	6.8	■	19.2	4 900	-20...+55	55 000 / 40 000	92 500	②
RL 65-21/14	56	32.9	**24**	12...26.4	6.6	■	14.0	4 500	-20...+70	60 000 / 30 000	102 500	①
RL 65-21/14 H	61	35.8	**24**	12...26.4	6.8	■	18.0	4 900	-20...+60	55 000 / 35 000	92 500	②
RL 65-21/18/2 HPR-180	61	35.8	**48**	36...60	6.8	■	17.3	4 900	-20...+70	55 000 / 27 500	92 500	②

Subject to change

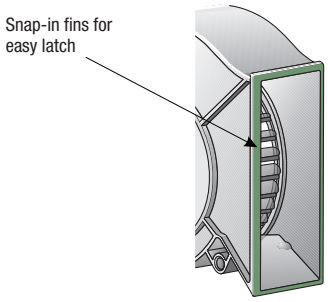

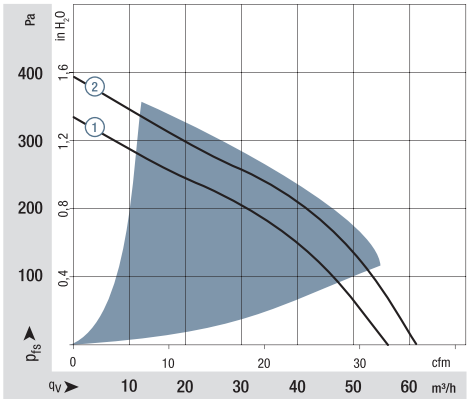

Air performance measured according to: ISO 5801.
Installation category A, without contact protection.
Noise: Total sound power level L_{WA} ISO 10302
measured on a hemisphere with a radius of 2 m.
Sound pressure level L_{pA} measured at 1 m distance from fan axis.
The values given are applicable only under the specified measuring conditions and may differ depending on the installation conditions.
In the event of deviation from the standard configuration, the parameters must be checked after installation!
For detailed information see
http://www.ebmpapst.com/general conditions

