E11531

Mounting clip

MOUNTING CLIP V4A D18 MM

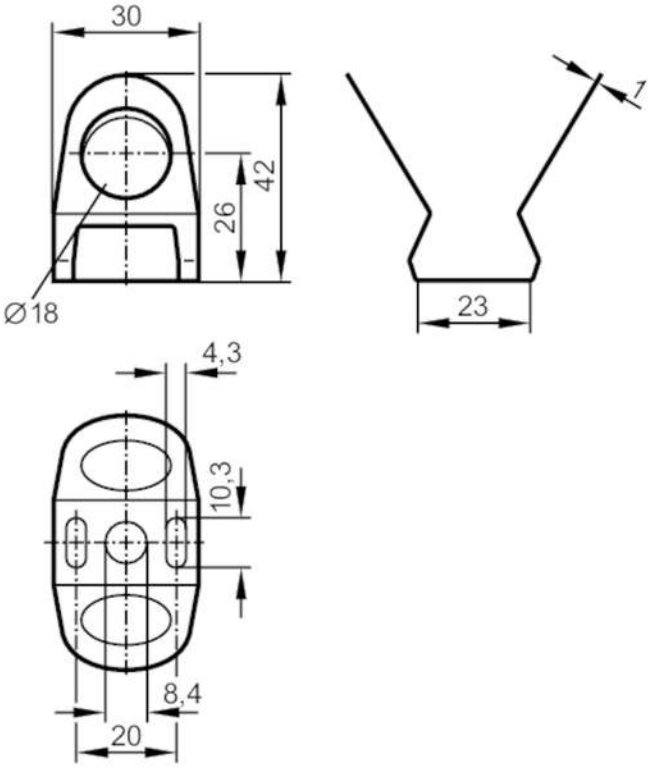

Application		
Design		for smooth-body units Ø 18 mm
Mechanical data		
Weight	[g]	16.3
Dimensions	[mm]	Ø 18
Materials		stainless steel (1.4404 / 316L)
Remarks		
Pack quantity		1 pcs.
Diagrams and graphs		