

Version 21

EOLIS 6000

The two independent and isolated Channel design of EOLIS 6000P0-T0 allows the measurement of DC voltage and current on the inputs, to calculate the dc power and the average power, as well as the positive and negative energy.





- Presentation
- Range
- Dimensions
- Factory settings
- Inputs - Outputs
- Characteristics
- Options listing
- Functions
- Wiring

Presentation

EOLIS 6000 is a continuous power converter.

- EOLIS 6000 is particularly suitable for photovoltaic installations.
- The two independent and isolated Channel design of EOLIS 6000 allows the measurement of both inputs, the calculation of the continuous power and the average power.
- EOLIS 6000 uses our new BASELINE technology (on DIN RAIL) that allows it to be plugged-in and out easily. Its front-facing USB socket allows simple programming by PC.
- Its graphic display and joystick make it a user-friendly and easily programmable device.
- This converter can be connected downstream of STRINGS of 1 or more solar panels and controls the current, voltage and power delivered by these assemblies

EOLIS 6000 is guaranteed for 5 years

Range

Converter with graphic display	**Inputs** Current, Voltage, on external shunt 100mV	**Outputs**				**Communication**	**Case width (mm)**		Converter without graphic display
		Number of Analogs		Number of Relays					
	2 inputs	1	2	2	4	RS485 USB	22,5	45	
EOLIS 6000P0	✓					✓	✓		EOLIS 6000T0
EOLIS 6000P2	✓	✓	✓			✓	✓		EOLIS 6000T2
EOLIS 6200P0	✓			✓		✓		✓	EOLIS 6200T0
EOLIS 6200P2	✓	✓	✓	✓		✓		✓	EOLIS 6200T2
EOLIS 6400P0	✓				✓	✓		✓	EOLIS 6400T0
EOLIS 6400P2	✓	✓	✓		✓	✓		✓	EOLIS 6400T2

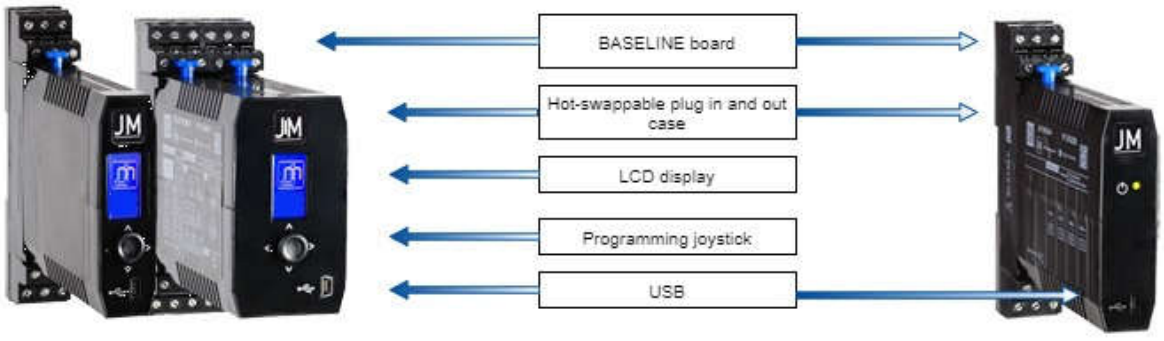

Dimensions

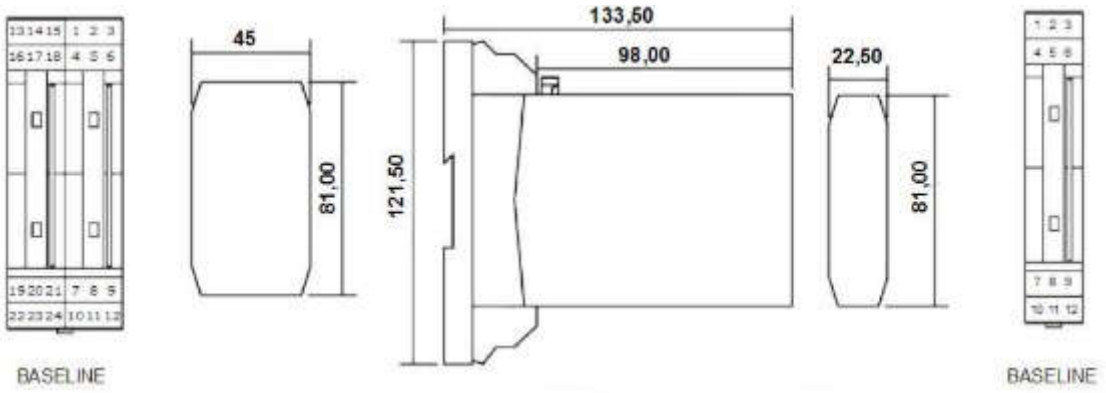

Dimensions : width : 22,5 or 45 mm - Height : 81 mm - Depth : 98 mm

BASELINE boards are to be ordered separately

22,5 mm Case : Reference BL01ALV ; 45 mm Case : Reference BL02ALV

For multi-converter boards, please consult us.

Factory settings

EOLIS 6000P

Channel 1	Channel 2	Relays (2 RT or 4T)
Input : 0-1500V	Input : 0-100mV	Alarm : High
Output : 4-20mA	Output : 4-20mA	Threshold : 1000
Display : 0-1500	Display : 0-100.00	

Communication speed : 9600 bauds, Slave address : n°1, Temps d'intégration : 10 min

EOLIS 6000T

Channel 1	Channel 2	Relays (2 RT or 4T)
Input : 0-1500V	Input : 0-100mV	Alarm : High
Output : 4-20mA	Output : 4-20mA	Threshold : 1000
Display : 0-1500	Display : 0-100.00	

Communication speed : 9600 bauds, Slave address : n°1

Other settings on demand

Inputs - Outputs

Input gauges

Voltage input 1	Standard scales : 0-1500Vdc Adjustable scales : From 0 to 1500Vdc
Current input 2	Standard scales : 0-100mV, shunt to be provided : 1 to 1000A Adjustable scales : From 0 to 100mV, shunt to be provided : 1 to 1000A

Output gauges

Current Output 1 & Output 2	Standard scales : 0-20mA ; 4-20mA Adjustable scales : From 0 to 20mA
Voltage Output 1 & Output 2	Standard scales : 0-10V Adjustable scales : From 0 to 10V
Output Relay	Relay 2RT or 4T (R on demand) : 2A-250Vac
Communication	Isolated USB in Front Panel / isolated RS485 Modbus RTU

Characteristics

Display	
Type	LCD backlit
Color	Blue
Number of characters	5
Numbers of lines	5
Programming joystick	5 positions
Input characteristics	
Current input impedance	>10 MΩ (0-100mV)
Voltage input impedance	>10 MΩ
Output characteristics	
Permissible impedance on the current output 1 & 2	<1kΩ
Permissible impedance on the voltage output 1 & 2	>1kΩ
Isolation	
Supply / Input(s)-Output(s)-Relay- RS485-USB	4200Vrms, 50Hz, 1mn
Input(s) / Output(s) / RS485 / Relay	2500Vrms, 50Hz, 1mn
Input x / Input y	2500Vrms, 50Hz, 1mn
Output x / Output y	2500Vrms, 50Hz, 1mn
USB / Input 2	Without
USB / Input 1-Output(s)-RS485-Relay	2500Vrms, 50Hz, 1mn
Auxiliary source	
Voltage supply	22-240Vdc or 90-230Vac 50/60Hz

General characteristics	
Precision Class	0.1
Input analog / digital conversion	24 bits
Output analog / digital conversion	16 bits
Response time	<180ms
Thermal drift	<50ppm
Residual ripple on current output	<20µA
Residual ripple on voltage output	<10mV
Maximum of consumption	<10VA
Operating temperature	-10°C … +60°C
Storage temperature	-25°C … +80°C
Protection factor	IP20 Black self-extinguishing polyamide housing V0

Options listing

Option	Device code
Tropicalization for 22,5mm or 45mm cases	EOLIS 6XXXX-T
Auxiliary source 20-60Vac	EOLIS 6XX9XX

Functions

Display functions	
LCD display	Graphic display by LCD screen
LED indicators	1 green LED on devices without display
5 positions joystick	Allows you to configure the parameters displayed on the front panel screen
Programming lock	Locking of the programming on the front panel or by the IXLOG software Unlock by long press on the joystick.
Programming	Programming via joystick on the front panel, or via USB with IXLOG software
Memory Mini / Maxi	Storage of the maximum and minimum value of the measurement on each input channel
Customizing the display	Resolution, Comma, Contrast adjustment, Display off
Input	
Inputs display	The display allows to visualize the input in physical value and in programmed value
Adjustable input scale	Allows to zoom on the input either in manual or automatic mode
Offset	Manual adjustment of the input offset
Cut Off	Threshold below which the input is considered as null
Smart functions	
Sensor signal loss	Translates the sensor signal loss on: • the display, • each of the analog outputs, • the digital output, • the status of the relays
Filtering	Integration of the measurement over the defined time
Calculation mode	Rule calculation (+, -, x, /), result on input 3
Square root	The output(s) are function of the square root of the input
Pilot function/simulation	The pilot function makes it possible to act on the display value influencing the output(s), independently of the input The Pilot function is activated either by the digital link (RS485 or USB) or by the joystick on the front panel
Segmentation in 99 points	Linearization in 99 points (free choice for each point), allows to create an output function by segmentation of the signal of each input channel

Outputs	
Visualization of the outputs	The display allows to visualize the outputs, in physical value and percentage; as well as the status of the relays
Outputs assignment	Assignment of outputs to inputs or to the control function, independently for each channel
Adjustable output scale	Allows you to zoom in on the outputs
Outputs limitation	Possibility to limit the value of the outputs - High limit and Low limit
Relays assignment	Assignment of relays to inputs or to the control function, independently for each channel
Thresholds	Single or band mode, with positive or negative safety Adjustment of thresholds, hysteresis and time delay (independent on rise or fall) Direct access to the thresholds
Acknowledgement of alarms	Independently for each alarm
Storage of alarms and/or relay status	Independently for each alarm
Links and communication	
RS485 MODBUS RTU	RS485 MODBUS RTU bidirectional digital link allowing to : • recover the measurements and transmit them in digital format • configure and control the device
Digital bus	Access to the digital bus via the USB socket (when converters are used on the interface boards)
USB front	USB front panel to connect directly to the USB port of a PC for programming via the IXLOG software
Mapping of Modbus addresses	Mapping of Modbus addresses, allowing you to choose your own variable address

Wiring

EOLIS 6000P0

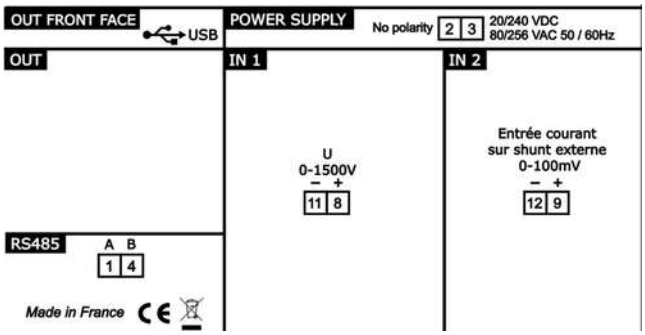

EOLIS 6000P2

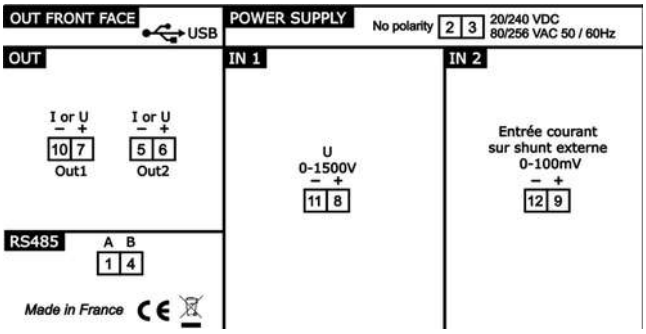

EOLIS 6200P0

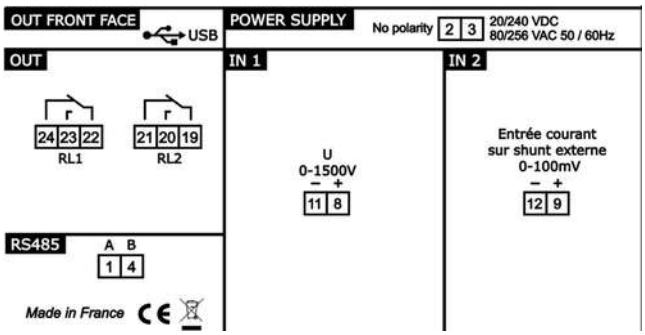

EOLIS 6200P2

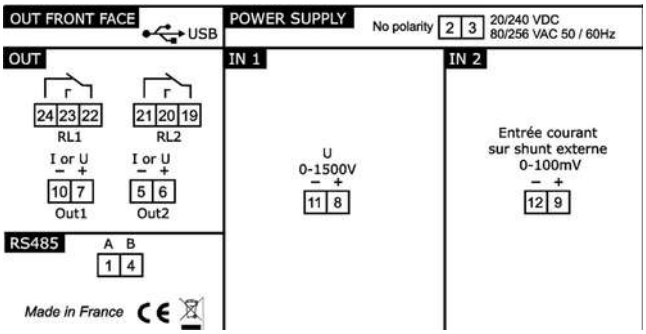

EOLIS 6400P0

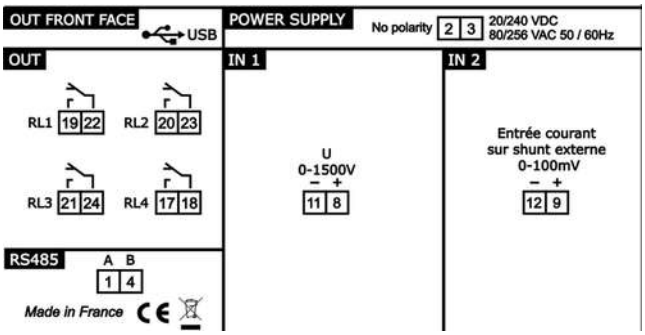

EOLIS 6400P2

