

Filament lamp, 24V, 4W

Part no. SL4-L24
Article no. 171383

Catalog No. SL4-L24

Delivery programme

Product range			SL4 signal towers
Basic function			Accessories
Basic function accessories			Filament bulbs
Mounting			Ba15d
lifespan		h	3000
Power			4 W
For use with			SL4-L-…
Rated operational voltage	U_e	V	24 V
Connection to SmartWire-DT			no

Technical data ETIM 5.0

Lamps (EG000028) / Indication- and signalling lamp (EC000399)

Electric engineering, automation, process control engineering / Lighting installation, device / Light medium / Indication- and signal lamp (ecl@ss8-27-11-06-31 [AKE242010])

Lamp voltage		V	24 - 24
Luminous flux		lm	0
Socket			BA15d
Lamp			Incandescent lamp
Lamp shape			-
Halogen			No
Krypton			No
Xenon			No
Colour			None
Colour temperature		K	2800
Diameter		mm	0
Total length		mm	0
Suitable for torches			No
Suitable for pointer			Yes
Nominal current		mA	0
Lamp power		W	4
Average nominal lifespan		h	3000

Dimensions

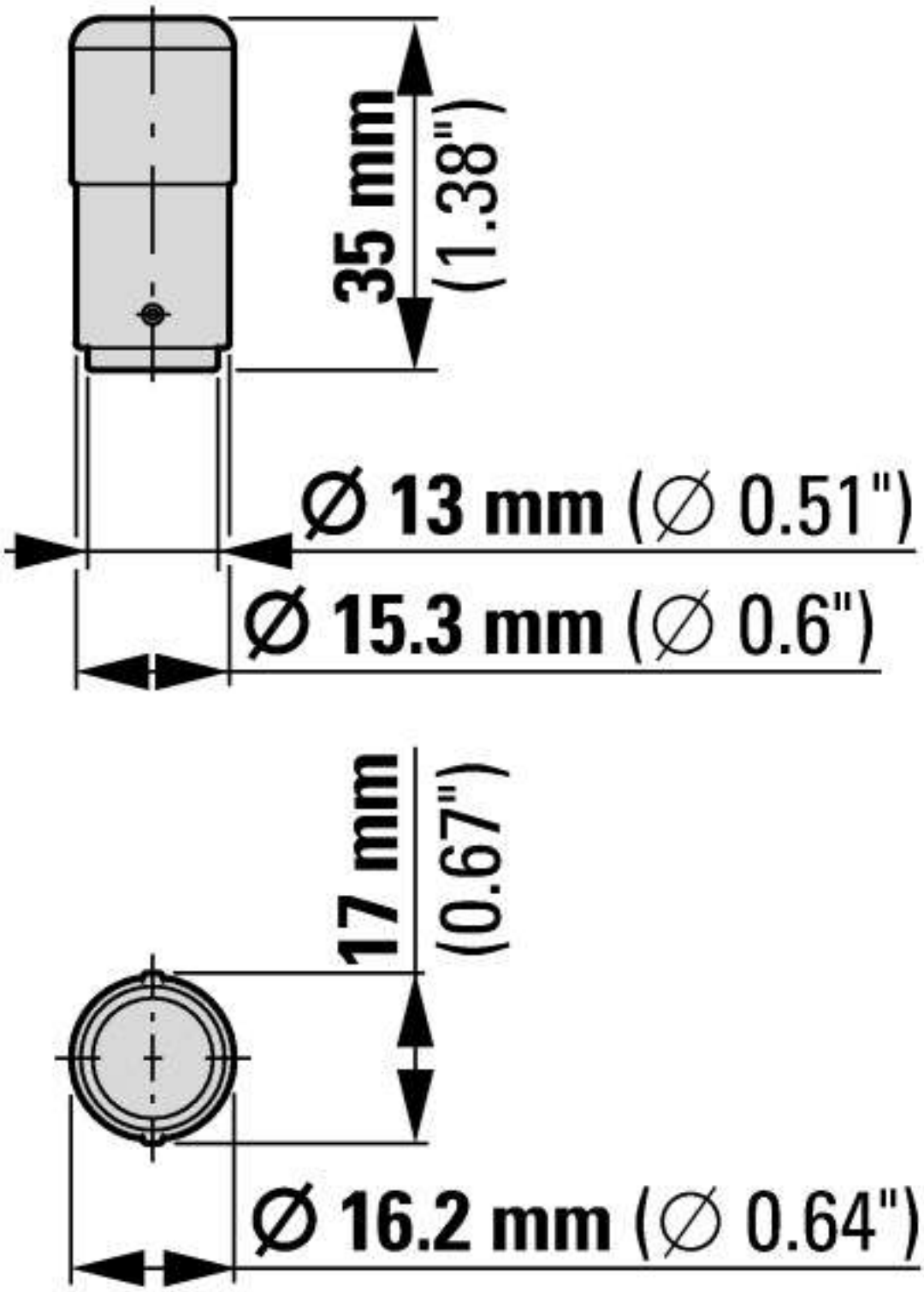

© 07/2014 by Eaton Industries GmbH