2300 Series

Cam Action Overhead Closer

Introduction

Briton 2300 Series is a precision manufactured cam-action, slide channel door closer, in a compact, surface fixed unit. It provides exceptional ease of use by reducing the resistance encountered when opening the door allowing, in particular, children and the elderly to overcome the closing power without any problems.

Force Profile (at size EN 3)

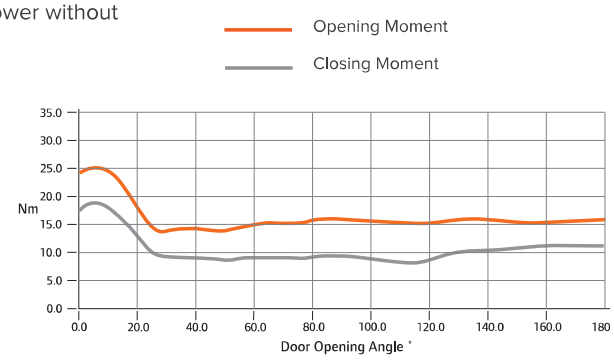

Features & Functions

- Adjustable power size EN 2-4
- Certified in door mount push/pull and transom mount push/pull applications
- High efficiency cam action technology provides reliable closing for fire door applications and easy operation for accessibility meeting BS8300 requirements for use on accessible routes
- Adjustable closing speed and FAST Power Adjust dial feature allows easy power adjustment to suit door conditions
- Certified built-in adjustable backcheck to prevent damage to the door and frame
- In-built temperature compensation ensures reliable performance without the need for seasonal adjustment
- Unique self-adhesive 'Accufit' installation template, together with easy-to-read instructions assist quick, simple and accurate installation
- Radiused slide in cover and spindle cap conceals main door closer fixing and adjustment screws
- Softline cover option secured by simple spring-clips for quick installation with no visible fixings
- Optional hold-open track (**not to be used on fire doors**)



2320 with standard trimplate in SES finish

Closers are available with slide in trimplate or with all-over Softline cover in stainless steel. Mounting options include door and transom mounting on push or pull side of the door. See overleaf for details.

Certification

UKCA Marked to EN 1154 (1121-CPR-UK-AD7605)

CE Marked to EN 1154 (2812-CPR-AD5118)

Certifire Approved (CF5291)

Fire tested to EN 1634-1 for use on fire doors up to 2hr timber

Environmental Product Declaration in accordance with ISO 14025 & EN 15804

DoP available at www.britondops.co.uk

Allegion (UK) Limited
35 Rocky Lane, Aston, Birmingham B6 5RQ
T: +44 (0) 330 8080 617
E: contactuk@allegion.com

ALLEGION™

www.briton.co.uk

Briton

DOOR CONTROLS

Cam Action Overhead Closer Briton 2300 Series

Product features	Product references	
	2320B.T	2321B.T
Pull side door mount and Push side transom mount	■	
Push side door mount and Pull side transom mount		■
Variable closing power EN size	2 - 4	2 - 4
Door limits (width/weight)	1100mm/80kg	1100mm/80kg
Accufit template	■	■
Maximum opening angle (door or transom mount)	180°	180°
Closing speed & latch action adjustment	■	■
Adjustable backcheck	■	■
Adjustable delayed action		
In-built temperature compensation	■	■
Mechanical hold-open	□	□
Matching channel, arm & cover finish	■	■
All over metal cover	□	□
Finishes available	SES, SSS	SES, SSS
Warranty period	10yrs	10yrs
UKCA & CE Classification (pull side door & transom mount)	4 8 2-4 1 1 3	
UKCA & CE Classification (push side door & transom mount)	3 8 2-4 1 1 3	

■ Standard □ Available as an option/variant

Accessories & Parts	
2300.AP	Arm pack
2300.CPS	Softline cover pack
2300.F.PLT	Fixing plate
2300.FPCT	Fixing pack closer and track arm
2300.FPT	Fixing pack track arm only
2320.HP	Hold-open conversion pack
2320.NS	Nylon track slider
2320.RI	Rubber inserts
2327.CS	2300 & 2700 Series cam action cushion stop
1502097	Mounting fixing plate



2320 with trimplate - door mounted push side



2320 with softline cover - transom mounted pull side

Finishes

All finish variants are supplied with matching arm and slide track.

SES
Sprayed silver

SSS
Satin stainless steel

2300 Series

Cam Action Overhead Closer

All dimensions are in mm

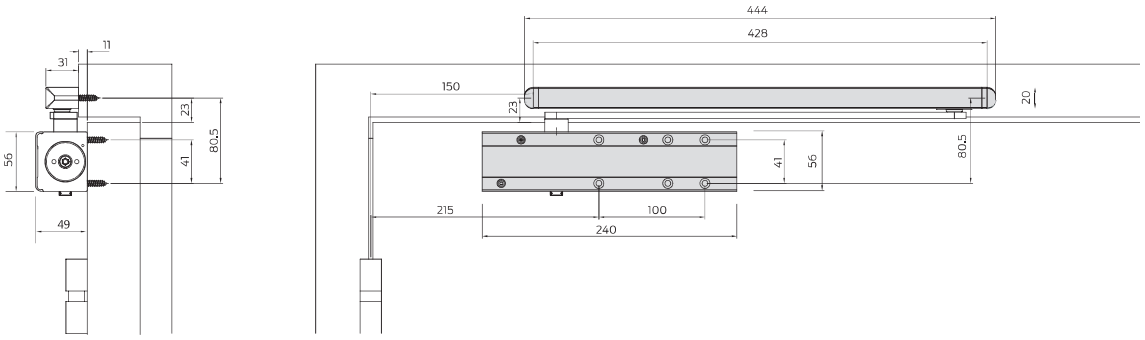

Door mount - Pull side (trimplate version)

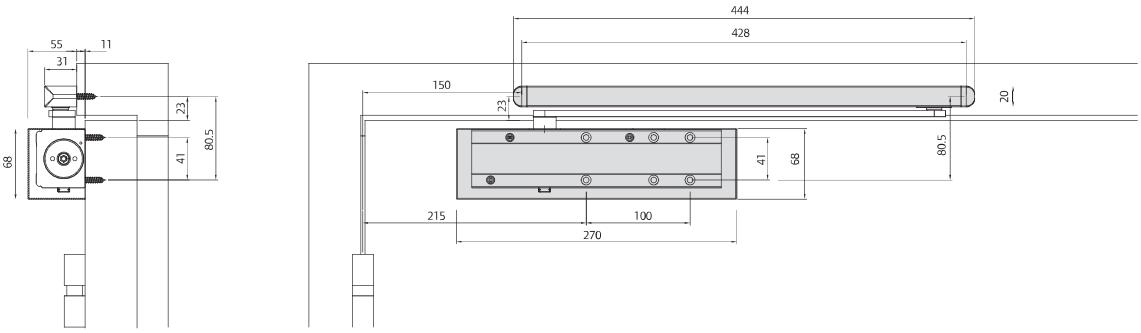

Door mount - Pull side (Softline cover version)

2320B.T
Door mount pull side
Max. opening angle 180°

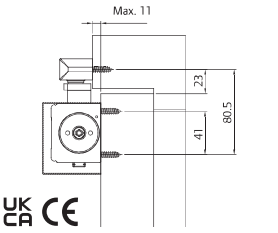



2320B.T
Transom mount push side
Max. opening angle 120°

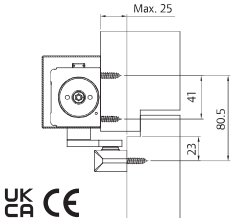



2321B.T
Door mount push side
Max. opening angle 120°

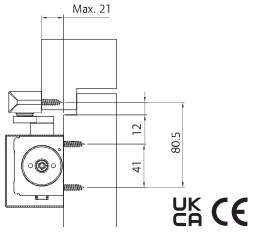



2321B.T
Transom mount pull side
Max. opening angle 180°

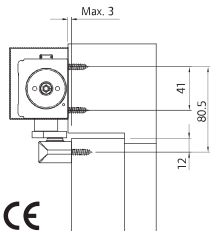



Allegion (UK) Limited
35 Rocky Lane, Aston, Birmingham B6 5RQ
T: +44 (0) 330 8080 617
E: contactuk@allegion.com

ALLEGION™

www.briton.co.uk

General Maintenance

2300 Series

Door controls

Allegion has identified that many problems associated with overhead door closers can be attributed directly to errors in installation rather than problems with the door closer itself. If the door is not closing properly into the frame you should first disconnect the door closer (disconnect the arm(s)) and determine that there is not an underlying problem with the door, frame or any smoke /draft seals that might be fitted.

PLEASE NOTE:

The power of the door closer should not be used to overcome problems associated with the door or other items of hardware fitted to it.

Under no circumstances should the closer body be dismantled.

Types of maintenance

Much of the routine maintenance recommended consists of a combination of visual and mechanical checks, cleaning and lubrication. Look out for the icons opposite which provide a 'quick glance' reminder of the maintenance required.

Visual checks

Primarily making a visual check on the product and surrounding door/frame looking for wear, damage, and general condition.



Functional checks

Consists of checking that the product operates properly ensuring the door can fully close without any binding or undue force required. Check that any seals or weatherstripping do not inhibit correct operation of the door



Check fixings

Fixings need to be checked regularly and tightened when necessary. Check that no projection of fixings prevents the door from swinging freely.



Lubricating

Some products will benefit from periodic lubrication using a light machine oil or as instructed.



Cleaning

Build up of grease, dust and harmful chemicals (e.g from floor cleaning) should be removed to prevent corrosion and maintain the product finish.



Allegion (UK) Limited
35 Rocky Lane, Aston, Birmingham B6 5RQ
T: +44 (0) 330 8080 617
E: contactuk@allegion.com

Briton

DOOR CONTROLS

Closer Maintenance

WEEKLY

Release the door from the fully open position and ensure that it closes fully into the frame. Ensure the latch (if fitted) engages fully into the strike plate. Repeat the process a few times from different angles of opening to ensure the door closes consistently each time.



Check and adjust the closing and latching speeds if necessary.

Check the backcheck comes into operation at the desired angle and readjust if necessary.

Check that the door or hardware does not come into contact with the door frame or the surrounding structure.



QUARTERLY

The fixings of the closer body and the slide track are subject to stress and should be checked carefully to make sure they are tight.



Periodically apply a little light machine oil to the moving joints of the arm and slide track.



Check any fire and smoke seals to ensure they do not foul the action of the door.



Check for any loss of fluid from the door closer body which would indicate a failing device.

Clean the closer body, arms and track if necessary following the guidance on “Care of Finishes” on page 16 of the ‘Service & Maintenance Guide’.



FIRE DOOR APPLICATIONS

When installed as part of a fire precaution system the door closing mechanism, including the door selector if used on a double door arrangement, should be checked in accordance with standing periodic fire testing procedures.

Routinely check that all fixings of the closer body and track are tight.

Routine care of finishes as necessary.