SCHAEFFLER

Tapered roller bearings 31306-A (Series 313)

main dimensions to DIN ISO 355 / DIN 720, separable, adjusted or in pairs

The datasheet is only an overview of dimensions and basic load ratings of the selected product. Please always observe all the guidelines in these overview pages. Further information is given on many products under the menu item "Description". You can also order comprehensive information via the Catalogue selection system (https://www.schaeffler.de/content.schaeffler.de/en/news_media/index.jsp) or by telephone on +49 (91 32) 82 - 28 97.

d	30	mm	
D	72	mm	
T	20,75	mm	
a	24	mm	≈
B	19	mm	
C	14	mm	
$C_{a\ min}$	3	mm	
$C_{b\ min}$	6,5	mm	
d_1	54	mm	≈
$D_{a\ max}$	65	mm	
$d_{a\ max}$	40	mm	
$D_{a\ min}$	55	mm	

$D_{b\ min}$	68 mm	
$d_{b\ min}$	37 mm	
$r_{1,2\ min}$	1,5 mm	
$r_{3,4\ min}$	1,5 mm	
$r_{a\ max}$	1,5 mm	
$r_{b\ max}$	1,5 mm	

m	0,441 kg	≈ Mass
C_r	45000 N	Basic dynamic load rating, radial
C_{0r}	46500 N	Basic static load rating, radial
e	0,83	
Y	0,73	
Y_0	0,4	
C_{ur}	5400 N	Fatigue limit load, radial
n_G	10300 1/min	Limiting speed
$n_{\vartheta r}$	6400 1/min	Reference speed
	T7FB030	Comparative designation to DIN ISO 355

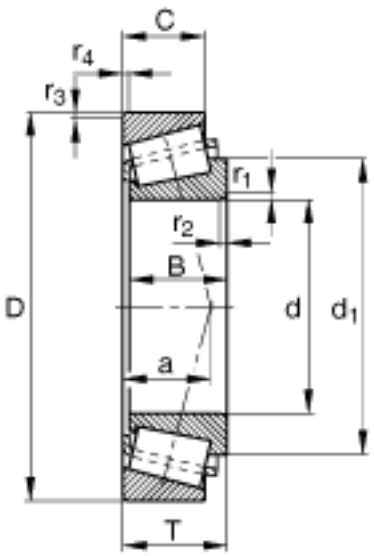
C
r4
r3
r1
r2
B
D
d
d1
a
T

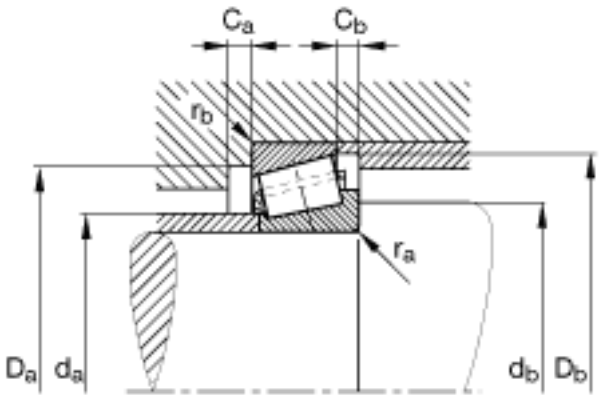
Ca
Cb
rb
ra
Da
da
db
Db