Brand of NTN Group

Technical data

UC215G2T20

Insert bearings



Spherical outer diameter, fixing by socket set screw, labyrinth seal, for high-temp. applications

VISUAL (S)

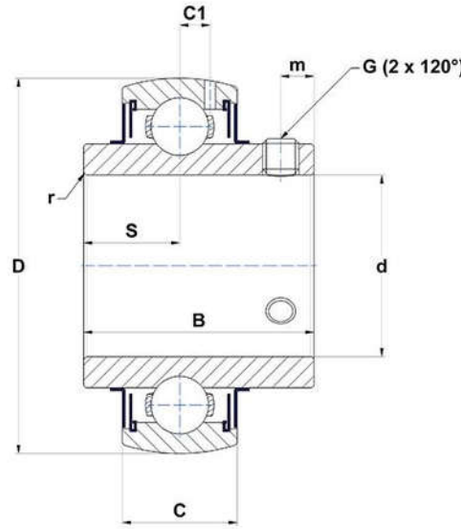

PRODUCT DEFINITION

Brand	SNR
B - Width of Inner Ring	77,8 mm
C - Width of Outer Ring	30 mm
C1 - Distance center of OR to center of lubrication zone	9 mm
d - Shaft diameter	75 mm
D - Outer diameter of OR	130 mm
G - Set screw size	M12x1,25
m - Distance to set screw	12 mm

UC215G2T20
Insert bearings

PRODUCT DEFINITION	
r - Radius Inner Ring	2
S - Distance front side/bearing centre	33,3 mm
f0 - Factor	14.7
SW - Wrench size	6 mm

PRODUCT PERFORMANCE	
C - Dynamic load rating	66000000 mN
C0 - Static load rating	49500000 mN
Operating temperature min.	253,15 °K
Operating temperature max.	473,15 °K

OTHER FEATURES	
Mass	2,21 kg
Recommended tightening torque for set screw	33 N-m

BEARING FREQUENCIES	
BPFO - Over rolling frequency on outer ring (60 rpm)	4.56298780487805 Hz
BPFI - Over rolling frequency on inner (60 rpm)	6.43701219512195 Hz
BSF - Over rolling frequency on rolling element (60 rpm)	5.69935497669222 Hz
BRF - Rotational frequency – rolling element (60 rpm)	2.84967748834611 Hz
FTF - Rotational frequency - cage (60 rpm)	0.414817073170732 Hz