Product datasheet

Specifications



inductive sensor XS1 M30 - L60mm - brass - Sn10mm - 24..240VAC/DC - cable 2m

XS1M30MA250

Main

Range of product	Telemecanique Inductive proximity sensors XS
Series name	General purpose
Sensor type	Inductive proximity sensor
Wiring configuration	2-wire
Output circuit type	AC/DC
Protection type	Short-circuit protection multi voltage
Device application	2-wire DC short-circuit protection
Sensor name	XS1
Sensor design	Cylindrical M30
Size	60 mm
Body type	Fixed
Detector flush mounting acceptance	Flush mountable
Material	Metal
Type of output signal	Discrete
Wiring technique	2-wire
[Sn] nominal sensing distance	10 mm
Discrete output function	1 NO
Electrical connection	Cable
Cable length	2 m
[Us] rated supply voltage	24...210 V DC 24...240 V AC 50/60 Hz
Switching capacity in mA	5...300 mA AC with overload and short-circuit protection 5...200 mA DC with overload and short-circuit protection
IP degree of protection	IP68 double insulation conforming to IEC 60529

Complementary

Thread type	M30 x 1.5
Detection face	Frontal
Front material	PPS
Enclosure material	Nickel plated brass

Disclaimer: This documentation is not intended as a substitute for and is not to be used for determining suitability or reliability of these products for specific user applications

Operating zone	0…8 mm
Differential travel	1...15% of Sr
Cable composition	2 x 0.34 mm²
Wire insulation material	PvR
Status LED	Output state: 1 LED (yellow) Supply on: 1 LED (green)
Supply voltage limits	20…264 V AC/DC
Maximum residual current	1.5 mA open state
Switching frequency	<= 2000 Hz DC <= 25 Hz AC
Maximum voltage drop	<5.5 V (closed state)
Maximum delay first up	70 ms
Maximum delay response	2 ms
Maximum delay recovery	5 ms
Marking	CE
Threaded length	51 mm
Length	60 mm
Net weight	0.205 kg

Environment

Product certifications	UL CSA CCC
Ambient air temperature for operation	-25…70 °C
Ambient air temperature for storage	-40…85 °C
Vibration resistance	25 gn amplitude = +/- 2 mm (f = 10…55 Hz) conforming to IEC 60068-2-6
Shock resistance	50 gn for 11 ms conforming to IEC 60068-2-7

Packing Units

Unit Type of Package 1	PCE
Number of Units in Package 1	1
Package 1 Weight	190.0 g
Package 1 Height	4.1 cm
Package 1 width	9.5 cm
Package 1 Length	13.2 cm
Unit Type of Package 2	S03
Number of Units in Package 2	44
Package 2 Weight	8.832 kg
Package 2 Height	30 cm
Package 2 width	30 cm
Package 2 Length	40 cm

Offer Sustainability

Sustainable offer status	Green Premium product
REACh Regulation	REACh Declaration

EU RoHS Directive	Pro-active compliance (Product out of EU RoHS legal scope) EU RoHS Declaration
Mercury free	Yes
RoHS exemption information	Yes
Environmental Disclosure	Product Environmental Profile
Circularity Profile	End of Life Information

Contractual warranty

Warranty	18 months

Dimensions

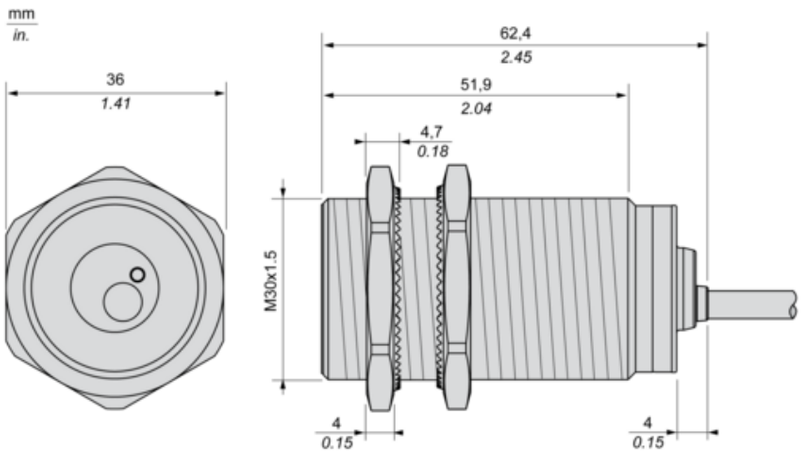

Minimum Mounting Distances

Side by side

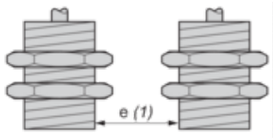

e (1) ≥ 20 mm/0.79 in

Face to face

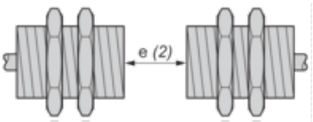

e (2) ≥ 120 mm/4.72 in

Facing a metal object

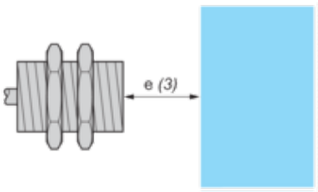

e (3) ≥ 30 mm/1.18 in.

Product datasheet XS1M30MA250

Connections and Schema

Wiring Schemes

2-Wire AC or DC

NO output

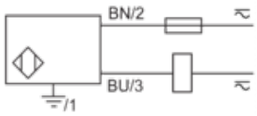

BU : Blue

BN : Brown

Performance Curves

Standard Steel Target : 30x30x1 mm

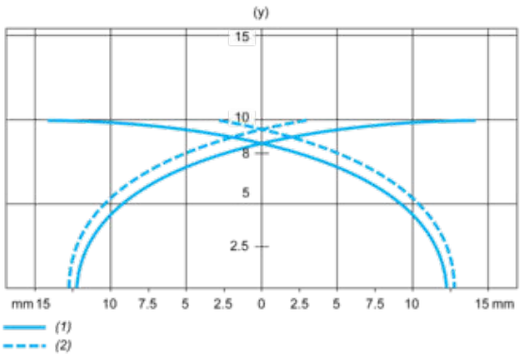

(1) Pick-up points

(2) Drop-out points (object approaching from the side)

(y) Sensing distance in mm