DCRL8

Automatic power factor controller, DCRL series, 8 steps



Product designation			Automatic power factor controller, 8 steps, icon display
Product type designation			DCRL8
Auxiliary supply			
Rated auxiliary supply voltage Us			
AC			
	min	VAC	100
	Max	VAC	440
DC			
	min	VDC	110
	Max	VDC	250
Auxiliary operating range			90…484VAC / 93.5…300VDC
Auxiliary rated frequency		Hz	50/60 ±10%
Power consumption Max		VA	8.5
Power dissipation Max		W	3
Immunity time for microbreakings		ms	<25
Voltage inputs			
Rated voltage (Ue)		VAC	600VAC L-L (rated max)
Operating range			50…720VAC L-L (415VAC L-N)
Frequency range		Hz	45…65
Type of measure			True RMS value
No-voltage release		ms	≥8
Measurement input impedance		kΩ	>15MΩ
Type of connection			Single phase, two phase, three phase with or without neutral or balanced three phase system
Current inputs			
Number of current input		Nr.	1
Type of input			Shunt supplied by external current transformer (low voltage). Max 5A
Measurement range			0.025...6A~ for 5A scale; 0.025...1.2A~ for 1A scale
Measurement method			True RMS value
Constant overload		Ie	1.2 Ie

The characteristics described in this document are subject to updates or modifications at any time. The descriptions, technical and functional information, illustrations and instructions in this brochure are purely illustrative, and are consequently not contractually binding

Overload peak		A	50A for 1s
Burden per phase		W	<0.6VA
Measurement data			
Type of voltage and current measurement			True RMS value
Power factor adjustment			0.5ind…0.5cap.
Type of temperature sensor			Internal
Temperature measurement range		°C	0…+212
Relay outputs			
Number of relay output		Nr.	8 (up to 14 with EXP10 06 - EXP10 07)
Contact arrangement			7 NO-SPST + 1 C/O-SPDT
Rated current			5A 250V AC1
UL/CSA and IEC/EN 60947-5-1 designation			B300
Maximum current at common contact terminal		A	10
Maximum switching voltage		VAC	415
Electrical life (with rated load)		cycles	105
Mechanical life		cycles	107
Insulations			
Rated insulation voltage Ui IEC/EN		V	600
Rated impulse withstand voltage Uimp		kV	9.5
Operating frequency withstand voltage		kV	5.2
Connections			
Type of terminal			Plug-in, removable
Conductor cross section			
	min	mm²	0.2
	Max	mm²	2.5
	min	AWG	24AWG (18AWG according to UL/CSA)
	Max	AWG	12
Tightening torque (Max)			
		Nm	0.56
		lbin	5
Ambient conditions			
Temperature			
Operating temperature			
	min	°C	-20
	max	°C	+60
Storage temperature			
	min	°C	-30
	max	°C	+80
Relative humidity		%	<80%
Maximum Pollution degree			2
Overvoltage category			3
Measurement category			III
Climatic sequence			Z/ABDM (IEC/EN 60068-2-61)
Shock resistance			15g (IEC/EN 60068-2-27)
Vibration resistance			0.7g (IEC/EN 60068-2-6)

The characteristics described in this document are subject to updates or modifications at any time. The descriptions, technical and functional information, illustrations and instructions in this brochure are purely illustrative, and are consequently not contractually binding

Housing

Execution		Flush mount
Material		Polycarbonate
Mounting		Flush-mount 144x144mm (5.67x5.67”)
Degree of protection		IP65 on front with gasket, if mounted in class IP65 panel or better. IP20 terminals
Dimensions (W x H x D)	mm	144 x 144 x 53.2
Weight	g	640

Dimensions

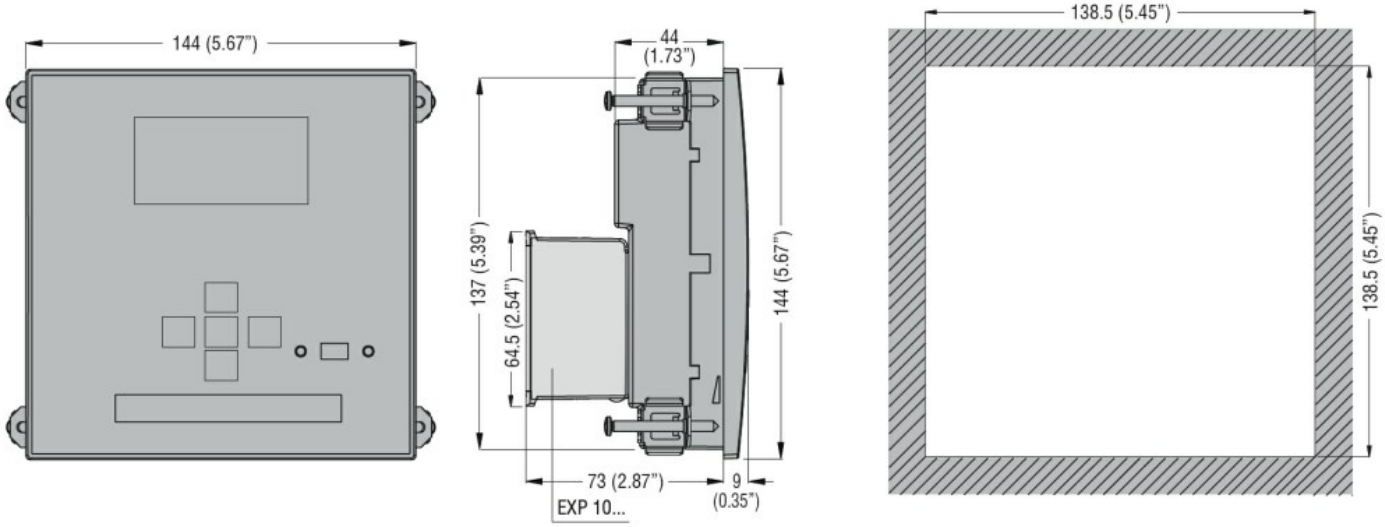

Wiring diagrams

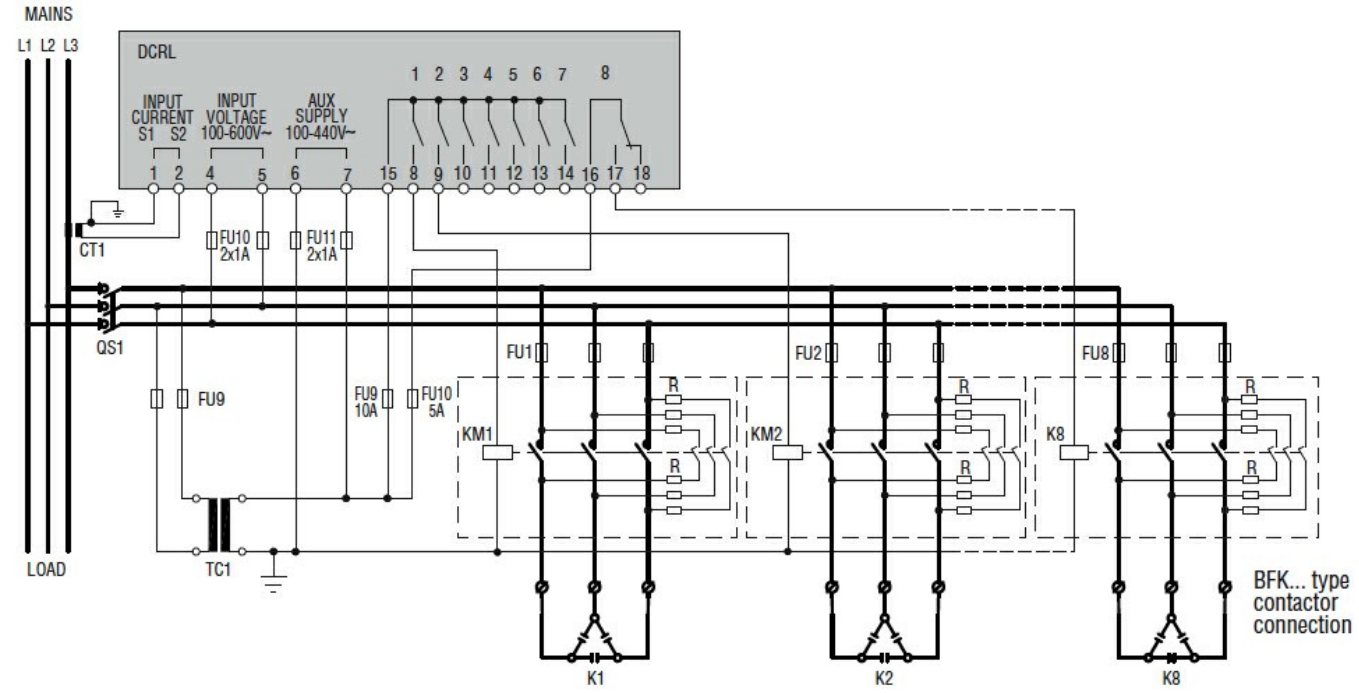

Certifications and compliance

Compliance

CSA C22.2-N°14

The characteristics described in this document are subject to updates or modifications at any time. The descriptions, technical and functional information, illustrations and instructions in this brochure are purely illustrative, and are consequently not contractually binding

	IEC/EN 61000-6-2
	IEC/EN 61000-6-3
	IEC/EN 61010-1
	IEC/EN 61010-2-030
	UL508
Certificates	
	cULus
	EAC
	RCM

ETIM classification

ETIM 8.0	EC001443 - Effective power (cos phi) monitoring relay

The characteristics described in this document are subject to updates or modifications at any time. The descriptions, technical and functional information, illustrations and instructions in this brochure are purely illustrative, and are consequently not contractually binding