Type: LXCVR-EV

Single Phase, Under and Over Voltage plus Time Delay

Terminal Protection to IP20



Dims: to DIN 43880
W. 17.5mm

- For use in Electric Vehicle Charging Stations
- Meets the requirements of BS7671: Amendment 1, 2020 – Section 722
- Designed for single phase, 230V AC supplies
- Fixed Under voltage trip level – 207V AC
- Fixed Over voltage trip level – 256V AC
- Fixed Time delay (from Under or Over voltage condition) – 4s
- True R.M.S. monitoring
- Monitors own supply and detects if the supply exceeds the fixed Under or Over voltage trip levels
- 1 x SPDT relay output 8A
- Green LED indication for supply status
- Red LED indication for relay/timing status
- 17.5mm DIN rail housing

ISO 9001:2015
Cert. No. 14125771

FUNCTION DIAGRAM

Under and Over Voltage Monitoring

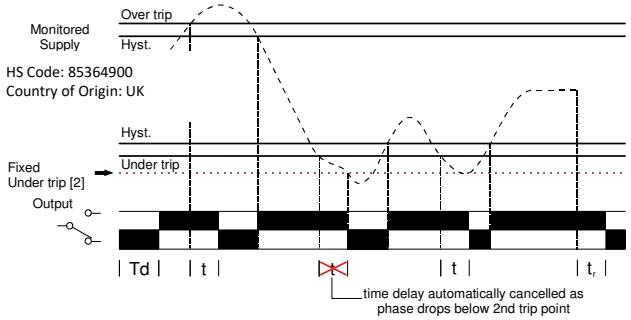

INSTALLATION

Installation work must be carried out by qualified personnel.

- BEFORE INSTALLATION, ISOLATE THE SUPPLY.
- The Connection Diagram below shows a basic EV installation, whereby the supply is being monitored by the Voltage monitoring relay. If an under or over voltage condition should occur the internal relay will de-energise and de-energise the Contactor as well.

Applying power.

- Apply power and the green "Power supply" ❶ and red "Relay" ❷ LED's will illuminate, the relay will energise and contacts 15 and 18 will close. Refer to the troubleshooting table if the unit fails to operate correctly.

Troubleshooting.

The table below shows the status of the unit during a fault condition.

Supply fault	Green LED	Red LED	Relay
No supply	Off	Off	De-energised
Under or Over Voltage condition (during timing)	On	Flashing	Energised for set delay (t)
Under or Over Voltage condition (after timing)	On	Off	De-energised
Supply below 70% of Un (fixed under trip level [2])	On	Off	De-energised

TECHNICAL SPECIFICATION

Supply/monitoring voltage Un* **(A1, A2):**	230V AC	
Frequency range:	48 – 63Hz	
Supply variation:	70 – 130% Un	
Overvoltage category:	III (IEC 60664)	
Rated impulse withstand voltage:	4kV (1.2/50µS) IEC 60664	
Power consumption (max.):	8VA	
Monitoring mode:	Under and Over voltage	
Trip levels:		
Under [2]:	70% of Un (fixed) ± 2%	
Under:	207V +/- 2%	
Over:	256V +/- 2%	
Hysteresis:	≈ 2% of trip level (factory set)	
Repeat accuracy:	± 0.5% at constant conditions	
Immunity from micro power cuts:	<50mS	
Response time:	≈ 50mS	
Time delay (t):	4 sec. (± 5%)	
Power on delay (Td):	≈ 1 sec. (worst case = Td x 2)	
Power on indication:	Green LED	
Relay status indication:	Red LED	
Ambient temp:	-20 to +60°C	
Relative humidity:	+95%	
Output **(15, 16, 18)**:	SPDT relay	
Output rating:	AC1	250V 8A (2000VA)
	AC15	250V 5A (no), 3A (nc)
	DC1	25V 8A (200W)
Electrical life:	≥ 150,000 ops at rated load	
Dielectric voltage:	2kV AC (rms) IEC 60947-1	
Rated impulse withstand voltage:	4kV (1.2/50µS) IEC 60664	
Housing:	Grey flame retardant UL94	
Weight:	75g	
Mounting option:	On to 35mm symmetric DIN rail to BS EN 60715 or direct surface mounting via 2 x M3.5 or 4BA screws using the black clips provided on the rear of the unit.	
Terminal conductor size	≤ 2 x 2.5mm² solid or stranded	
Approvals:	c UL us LISTED IND. CONT. EQ. E111187	
	Conforms to IEC. CE, UKCA, and RoHS Compliant. EMC: Immunity: EN 61000-6-2 (EN 61000-4-3 15V/m 80MHz - 2.7GHz) Emissions: EN 61000-6-4	

CONNECTION DIAGRAM

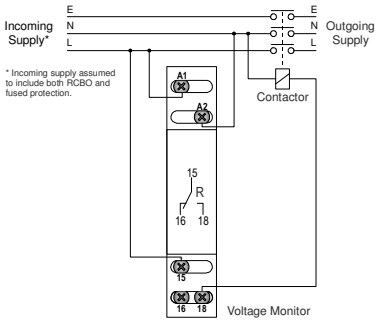

LED INDICATION

1. Power supply status (Green) LED
2. Relay output / Timing status (Red) LED



DIMENSIONS

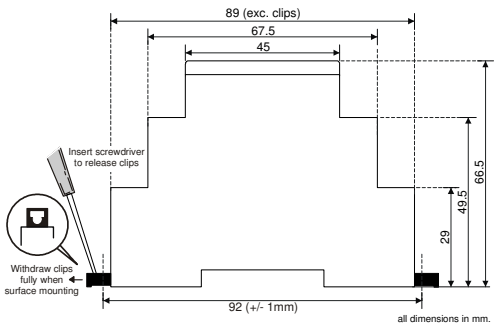

he Information provided in this literature is believed to be accurate (subject to change without prior notice); however, use of such information shall be entirely at the user's own risk.