Filter, Series 651

G651ABJP2JA000A

General series information
Series 651

- The AVENTICS Series 651 is an easy-to-install line of pneumatic filters, regulators and lubricators (FRLs) that offer the industry´s highest flow rates and widest temperature ratings. Available in 1/8-inch, and 1/4-inch port sizes, these FRLs are ideal for automotive and tire, packaging, food and beverage, and process applications requiring highly reliable operation and robust, modern-looking equipment.



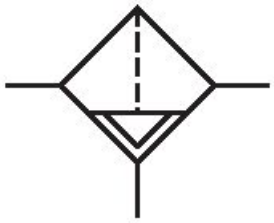

Technical data

Industry	Industrial
Parts	Filter
Reservoir	reservoir, PA, with PA protective guard
Port	G 1/4
Filter porosity	25 µm
Nominal flow Qn	1410 l/min
Condensate drain	fully automatic, open without pressure
Working pressure min.	0 bar
Working pressure max	16 bar
Min. ambient temperature	-20 °C
Max. ambient temperature	50 °C
Medium	Compressed air Neutral gases

Medium temperature note	Extended temperature range min./max. (optional) -40 °C ... 80 °C
Certificates	ATEX optional
Weight	0.25 kg
Type	Can be assembled into blocks

Material

Housing material	Aluminum
Seal material	Nitrile butadiene rubber
Material filter insert	Sintered polyethylene
Material condensate drain	Brass
Part No.	G651ABJP2JA000A

Technical information

Max. achievable compressed air class acc. to ISO 8573-1:2010 5 : 8 : 4 (5 µm filter porosity) und 6 : 8 : 4 (25µm filter porosity)

Other filter porosities on request.

The pressure dew point must be at least 15 °C less than ambient and medium temperature and may not exceed 3 °C.

The oil content of compressed air must remain constant during the life cycle.

Use only the approved oils from AVENTICS. Further information can be found in the “Technical information” document (available in https://www.emerson.com/en-us/support).

Dimensions

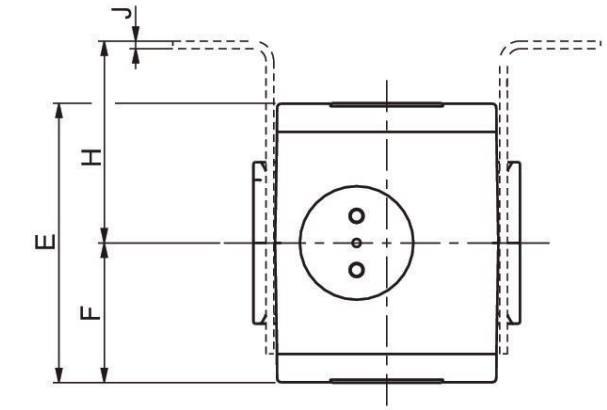

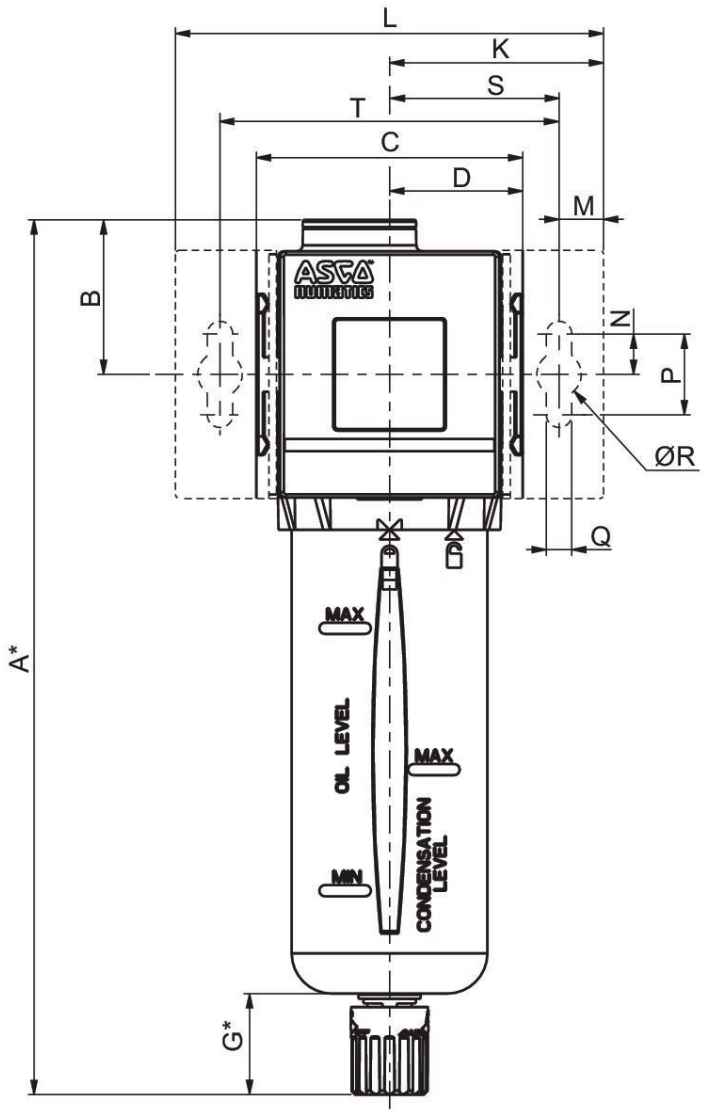

*Variable dimension based on the type of drain specified, if an automatic drain is specified, add another [[5] mm] to the “G” dimension, which also adds 5 mm to the “A” dimension.

Series	651
A	197
B	33,8
C	50
D	25
E	58
F	29
G	25
H	44,5
J	1,27
K	46
L	92
M	11
N	10
P	20
Q	6,3
R	11
S	35
T	70

Flow diagram
G 1/4

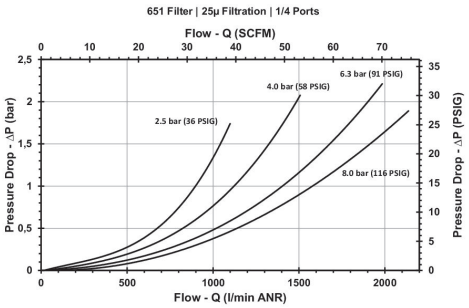

Flow diagram
G 1/8

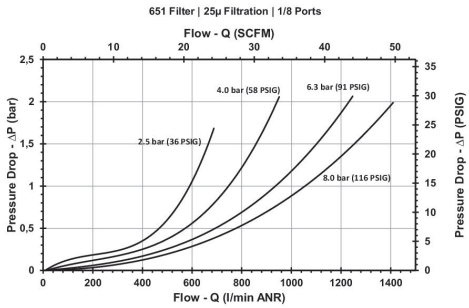

Accessories overview

