IP series

Pushbutton switches for harsh environments • bushing Ø 12 mm • momentary



DISTINCTIVE FEATURES

Illuminated or non-illuminated
Tactile feedback
Wide variety of configurations
Flat round actuator for optional marking
Sealed to IP67 and IP69K



ENVIRONMENTAL SPECIFICATIONS

- Front panel sealing: IP67 according to IEC 60529
  IP69K according to DIN 40050-9 (non-illuminated) with cap U5125
- Shock resistance: 100 g according to IEC 512-4, test 6c
- Vibration resistance: 10-500Hz - 10 g according to IEC 512-4, test 6d
- Salt spray: IEC 512-6, test 11f
- Robustness (non-illuminated): IK06 according to EN 62262 (1 joule)
- Operating temperature: -40 °C to +85 °C (-40 °F to +185 °F)

ELECTRICAL SPECIFICATIONS

- Max. current/voltage rating with resistive load (gold plated silver contacts):
  5 A 28 VDC, 70,000 cycles (only function 3)
  0.2 A 48 VDC, 500,000 cycles
  0.5 A 48 VAC, 500,000 cycles

  For W terminals, current has to be limited to 400 mA.
- Initial contact resistance: 100 mΩ max.
- Insulation resistance: 1 GΩ min. at 500 VDC
- Dielectric strength: 1,500 Vrms
- Contact bounce: 10 ms

LED COMPONENT SPECIFICATIONS

LED color	Forward current	Typ. forward voltage	Max. forward voltage
Super red (L0S)	20 mA	2.1 V	2.3 V
Yellow (L0Y)	20 mA	2.1 V	2.3 V
Green (L0G)	20 mA	2.1 V	2.3 V
Blue (L0B)	20 mA	3.2 V	3.8 V
White (L0W)	20 mA	3.35 V	4.25 V
Red/green (LSG)	20 mA	Red: 1.95 V / green: 2.1 V	2.5 V
Yellow/green (LYG)	20 mA	Yellow: 2 V / green: 2.1 V	2.5 V

A resistor must be series-connected by the user.

$$\text{Resistor value} = \frac{\text{supply voltage - LED forward voltage}}{\text{LED forward current}}$$

The company reserves the right to change specifications without notice.

IP series

Pushbutton switches for harsh environments • bushing Ø 12 mm • momentary

GENERAL SPECIFICATIONS

- Panel thickness: 1.5 mm (.059) min. 4 mm (.157 max.)
- Total travel:
  Function 3: 1.7 mm (.067) ± 0.3 mm (0.012)
  Function 5: 1.3 mm (.051) ± 0.3 mm (0.012)
- Typical operating force: 4 N ± 2 N
- Low level/mech. life: 1,000,000 cycles
- Torque: 1.5 Nm max. applied to nut
- Soldering: 320 °C (608 °F) max. for 3 sec.

MATERIALS

- Case: thermoplastic UL94-V0
- Actuator: polyamide 6/6
- Bushing/bezel: zinc die-cast (zamak), black painted
- Contacts: - silver, gold plated (std)
  - brass, gold plated (for option 104)
- Output wires (flying lead terminals):
  F version: AWG20, section 0.6 mm²
  W version: AWG24, section 0.23 mm²
- LED wires:
  F version: AWG26, section 0.12 mm²
  W version: AWG24, section 0.23 mm²
- Lens: polycarbonate
- Terminal seal: epoxy

AGENCY APPROVAL

2 A 125 VAC/250 VAC
File E83438
See following pages.

TERMINALS

ILLUMINATED MODELS

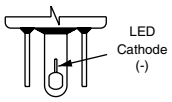

Solder lug **S**

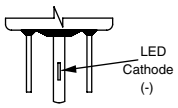

Straight **P**

NON-ILLUMINATED MODELS

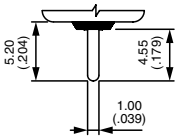

Straight **P**

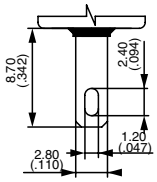

Quick-connect **Z1**

ELECTRICAL FUNCTIONS

ILLUMINATED MODELS

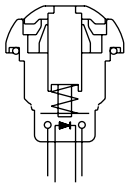

Function 3 (NO)

NON-ILLUMINATED MODELS

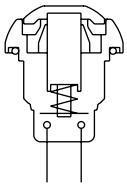

Function 3 (NO)

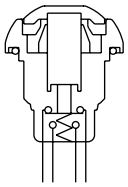

Function 5 (NC/NO)

MOUNTING

PANEL CUT-OUT

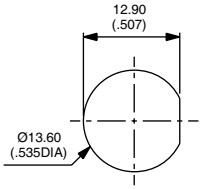

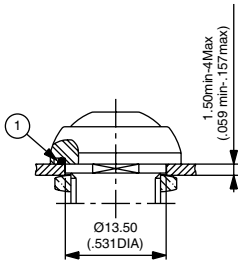

MATRIX MOUNTING - BACK OF PANEL SPACE REQUIREMENT

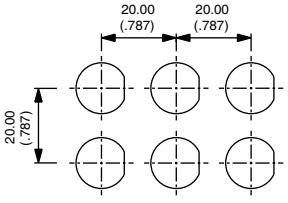

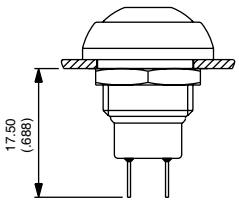

IP series

Pushbutton switches for harsh environments • bushing Ø 12 mm • momentary

BUILD YOUR PART NUMBER

BASIC PART NUMBER

IP _ _ _ _ _

SERIES

IP

ACTUATOR SHAPES

B	Round, curved, shiny
C	Square
R	Round, curved
P	Round, flat

Actuator marking available on round flat models (symbol 10 mm max.). On request.

ELECTRICAL FUNCTIONS

3	Normally open (NO)
5	NC/NO combined (non-illuminated)

TERMINALS

S	Solder lugs
F	Flying leads, standard
W	Flying leads, thin
P	Straight PC
Z1	Quick-connect (non-ill., NO only)

CONTACTS

AD	Silver, gold plated (standard)
CD	Brass, gold plated (option 104)

OPTIONS

_ _ _ _ _

ACTUATOR COLORS

1	Blue
B	Dark blue
2	Black
3	Green
4	Grey
5	Yellow
6	Red
7/1	White
8	Bright chrome
9	Orange

LED COLORS

Blank	Non-illuminated
L0S	Super red
L0Y	Yellow
L0G	Green
L0B	Blue
L0W	White
LSG	Red/green
LYG	Yellow/green

OPTIONS

100	Satin chrome bezel
101	Bright chrome bezel
104	High actuator (non-illum. round models only)

Option 104
If combined with electrical function 5 (NC/NO), this option should be ordered with CD contacts (brass, gold plated). Current/voltage rating: 100 mA 30 VDC

APPROVAL

UL	Consult factory for detail of approved models.

ABOUT THIS SERIES

On the following pages, you will find successively basic part numbers of switches and options in the same order as in above chart.

Notice: please note that not all combinations of above numbers are available. Refer to the following pages for further information.

A sealing boot is available to protect the switches against frost and sand. See "Sealing Boots" section of website.

Mounting accessories: Standard hardware supplied: 1 hex nut 14 mm (.551) across flats and 1 O-ring. Hex nut part number U166.

IP series

Pushbutton switches for harsh environments • bushing Ø 12 mm • momentary

SQUARE - ILLUMINATED SOLDER LUG TERMINALS



IPC3SAD  Normally Open

Also available with straight PC terminals: **IPC3PAD**
LED color is indicated by the bottom of the switch.

→ FLAT

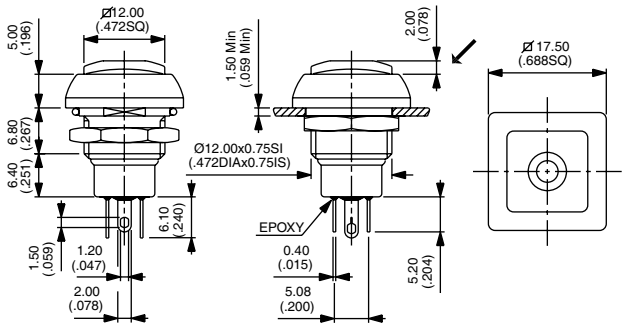

SQUARE - ILLUMINATED FLYING LEAD TERMINALS



IPC3FAD  Normally Open

For THIN flying leads, replace F with W.
Wire colors: black: NO contact, red: LED anode(+), blue: LED cathode(-)
Shown with standard flying lead terminals.

→ FLAT

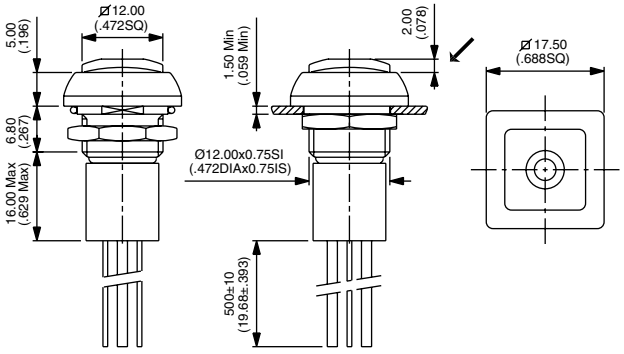

SQUARE - NON ILLUMINATED SOLDER LUG TERMINALS



IPC3SAD  Normally Open

IPC5SAD  Normally Open

Also available with straight PC terminals: **IPC3PAD** (NO) or **IPC5PAD** (NC/NO) and quick-connect terminals: **IPC3Z1AD** (NO only)

→ FLAT

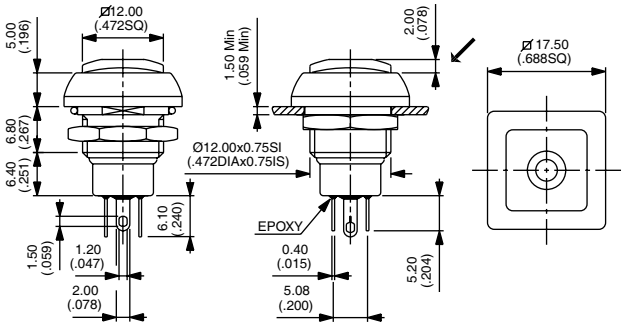

SQUARE - NON ILLUMINATED FLYING LEAD TERMINALS



IPC3FAD  Normally Open

IPC5FAD  NC/NO combined

For THIN flying leads, replace F with W.
Wire colors (NC/NO): black: NO, blue: NC.
Shown with standard flying lead terminals.

→ FLAT

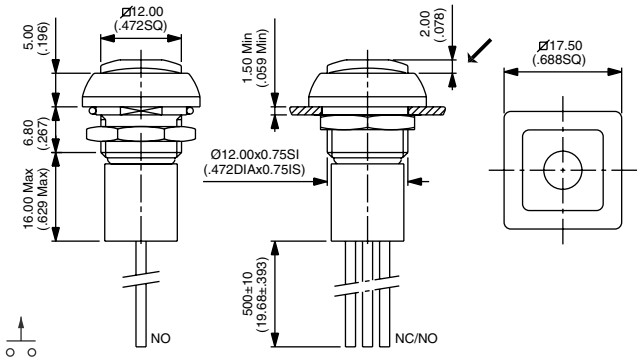

IP series

Pushbutton switches for harsh environments • bushing Ø 12 mm • momentary

ROUND - ILLUMINATED SOLDER LUG TERMINALS



IPR3SAD — Normally Open

Also available with straight PC terminals: **IPR3PAD**
LED colour is indicated by the bottom of the switch.

ROUND - ILLUMINATED FLYING LEAD TERMINALS



IPR3FAD — Normally Open

For THIN flying leads, replace F with W.
Wire colors: black: NO contact, red: LED anode(+), blue: LED cathode(-)
Shown with standard flying lead terminals.

ROUND - NON ILLUMINATED SOLDER LUG TERMINALS



Curved actuator, NO	IPR3SAD
Curved actuator, NC/NO	IPR5SAD
Flat actuator, NO	IPP3SAD
Flat actuator, NC/NO	IPP5SAD

Also available with straight PC terminals: **IPC3PAD** (NO) or **IPC5PAD** (NC/NO) and quick-connect terminals: **IPC3Z1AD** (NO only)

ROUND - NON ILLUMINATED FLYING LEAD TERMINALS



Curved actuator, NO	IPR3FAD
Curved actuator, NC/NO	IPR5FAD
Flat actuator, NO	IPP3FAD
Flat actuator, NC/NO	IPP5FAD

For THIN flying leads, replace F with W.
Wire colors (NC/NO): black: NO, blue: NC
Shown with standard flying lead terminals.

→ FLAT

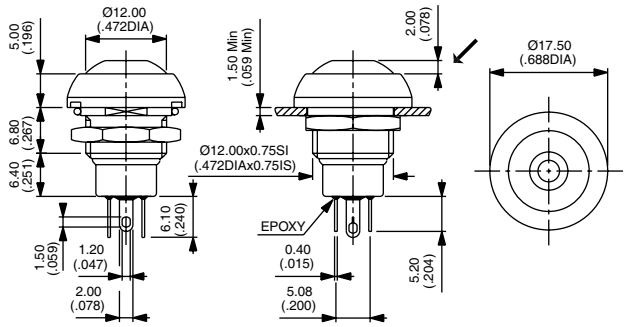

→ FLAT

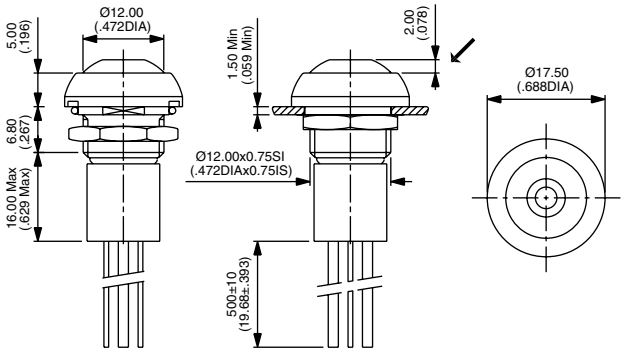

→ FLAT

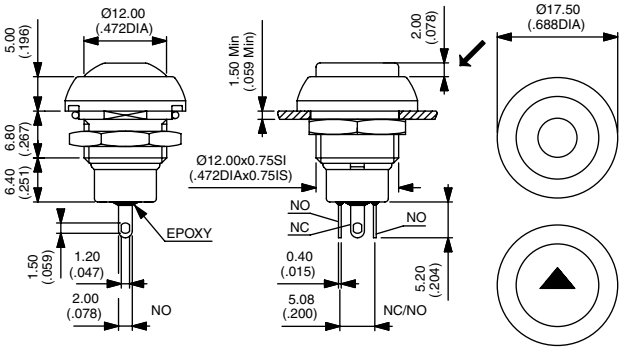

→ FLAT

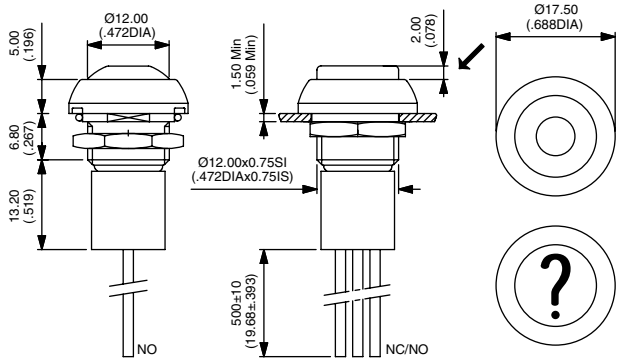

IP series

Pushbutton switches for harsh environments • bushing Ø 12 mm • momentary

ACTUATOR COLORS

BASIC P/N

1	Blue
B	Dark blue
2	Black
3	Green
4	Grey
5	Yellow
6	Red
7/1	White
8	Bright chrome
9	Orange
A	Satin chrome

LED COLORS

BASIC P/N

Blank	Non-illuminated
L0S	Super red
L0Y	Yellow
L0G	Green
L0B	Blue
L0W	White
LSG	Red/green
LYG	Yellow/green

OPTIONS

BASIC P/N

100	Satin chrome bezel
101	Bright chrome bezel
104	High actuator - For round, non-illuminated only If combined with function 5 (NC/NO), order with CD contacts (instead of AD contacts).

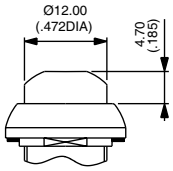

104 IPR

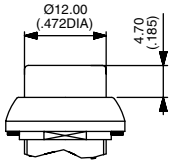

104 IPP

AGENCY APPROVAL

BASIC P/N

UL

Consult factory for details of approved models. To order switches marked UL, complete above box with "UL".