UNISTRUT®

A PART OF atkore INTERNATIONAL

Product Data Sheet

QRN series Kwikstrut - Washer & Channel Nut Assembly

Technical Data Sheet of Kwikstrut "QRN"

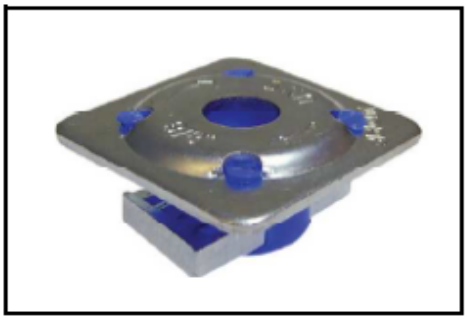

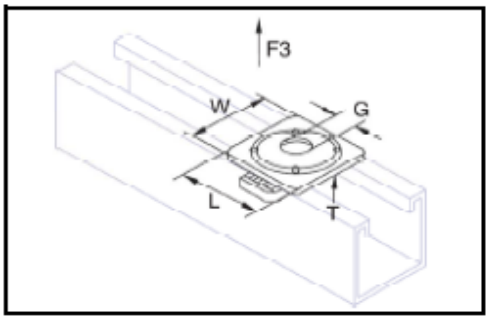

Material: verz. - Nut S460MC Electro zinc plated; Washer DX51 Electro zinc plated
DT - Nut S460MC Delta Tone; Washer DD11 Delta Tone
A4 - Nut Stainless Steel 1.4404; Washer Stainless Steel 1.4404
A2 - Nut Stainless Steel 1.4301; Washer Stainless Steel 1.4301
Plastic component Polyamid (PA6)

Article-Number	Type	Dimension [mm]				Weight [g]	max. permit Load F3 [kN]	PU
		G	L	W	T			
1390621	verz.	M6	40	40	2,5	64	5,0	50
1390821	verz.	M8	40	40	2,5	60	5,0	50
1391021	verz.	M10	40	40	2,5	59	5,0	50
1391221	verz.	M12	40	40	2,5	53	5,0	50
1390623	DT	M6	40	40	2,5	64	5,0	50
1390823	DT	M8	40	40	2,5	60	5,0	50
1391023	DT	M10	40	40	2,5	59	5,0	50
1391223	DT	M12	40	40	2,5	53	5,0	50
1352621	A4	M6	40	40	2,5	64	5,0	50
1352822	A4	M8	40	40	2,5	60	5,0	50
1352021	A4	M10	40	40	2,5	59	5,0	50
1352221	A4	M12	40	40	2,5	53	5,0	50
1352622	A2	M6	40	40	2,5	64	5,0	50
1350822	A2	M8	40	40	2,5	60	5,0	50
1351021	A2	M10	40	40	2,5	59	5,0	50
1351221	A2	M12	40	40	2,5	53	5,0	50

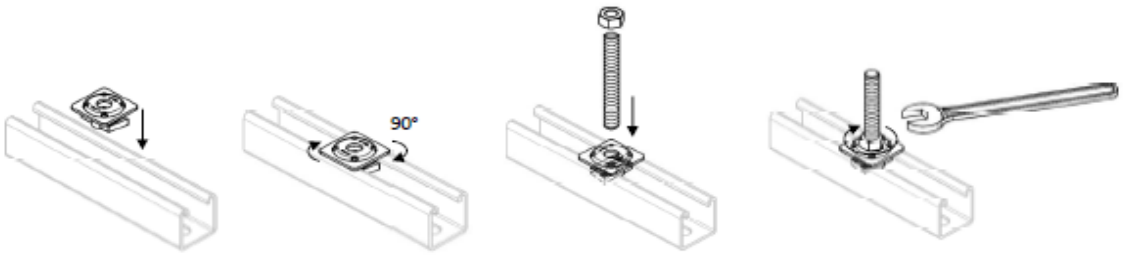

Note: Usable for all 41 mm Unistrut channels!