310.853.001
931085300101_AL

WERMA **853, 153**

EN 60947-5-1

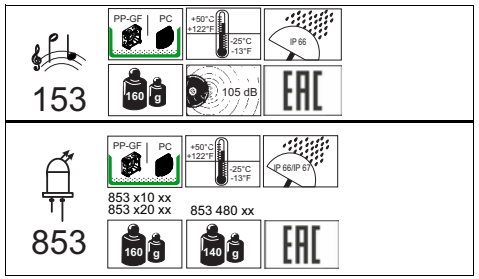

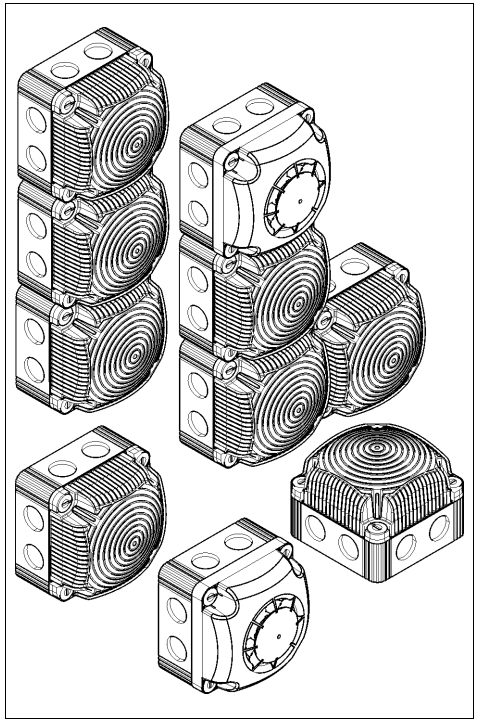

© D

WERMA Signaltechnik GmbH + Co. KG
D-78604 Rietheim-Weilheim
Telefon +49 (0)7424 / 9557-0
Telefax +49 (0)7424 / 9557-44
info@werma.com
www.werma.com

DANGER

(DE) Anschluss **ausschließlich** durch ausgebildete Elektro-Fachkräfte.
(GB) Electrical connection is to be made by trained electrical specialists **only**.
(FR) Le branchement doit **uniquement** être effectué par des professionnels.
(IT) Il collegamento deve essere eseguito **solo** da elettricisti specializzati.
(ES) La conexión **sólo** debe ser realizada por electricistas debidamente formados.
(PT) A ligação deve ser feita **exclusivamente** por profissional elétrico especializado.
(NL) De aansluiting mag **enkel** gebeuren door erkende vakmensen.
(CZ) Připojení smí **provádět** pouze kvalifikovaný personál.
(PL) Podłączenie **wyłącznie** przez specjalistów-elektryków.
(FI) Liittäminen kuuluu **ainoastaan** koulutettujen sähköalan ammattilaisten tehtäviin.
(RU) Подключение проводится только специалистом-электриком.
(TR) Bağlantı **sadece** eğitimli elektrik teknisyenleri tarafından yapılmalıdır.
(CN) 布线需由专业电工执行

DANGER EVS

853 x20 xx

(DE) Bei Epilepsie ungeeignet!
(GB) Unsuitable for epilepsy sufferers.
(FR) Ne convient pas aux personnes souffrant d'épilepsie.
(IT) Inadatto per epilettici.
(ES) Inadecuado para epilépticos.
(PT) Não aconselhavel a pessoas que sofram de Epilepsia.
(NL) Niet geschikt voor epileptici.
(CZ) Nevhodné pro epileptiky.
(PL) Nie stosować przy zchorzeniu padaczki.
(FI) Ei sovellu epileptikoille.
(RU) Не подходит для страдающих эпилепсией.
(TR) Epilepsi hastaliği olanlarin kullanmamasi önerilir.
(CN) 不适用于癫痫病患者

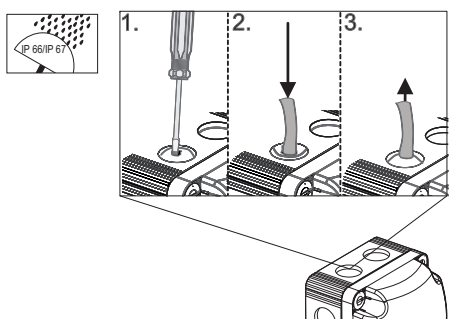

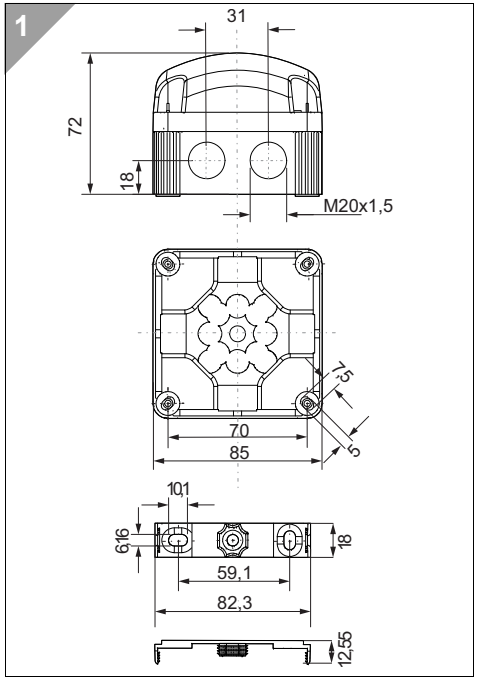

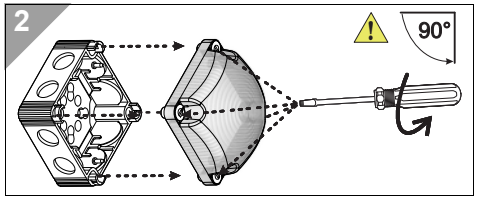

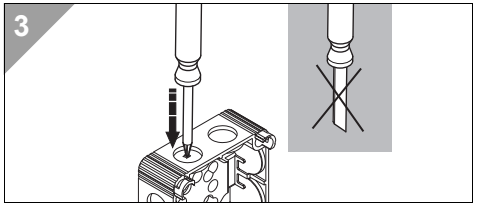

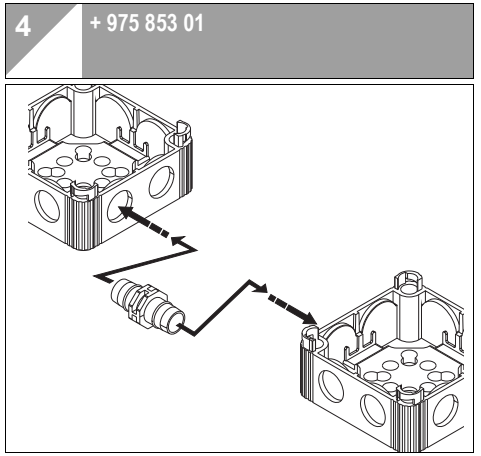

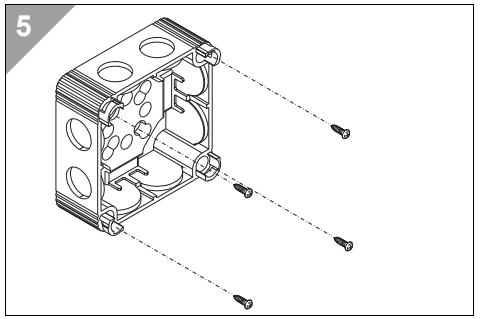

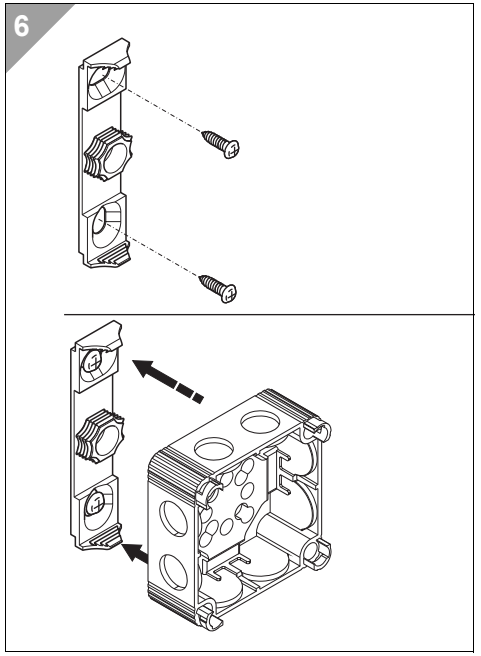

7a LED 853

⚠ DANGER

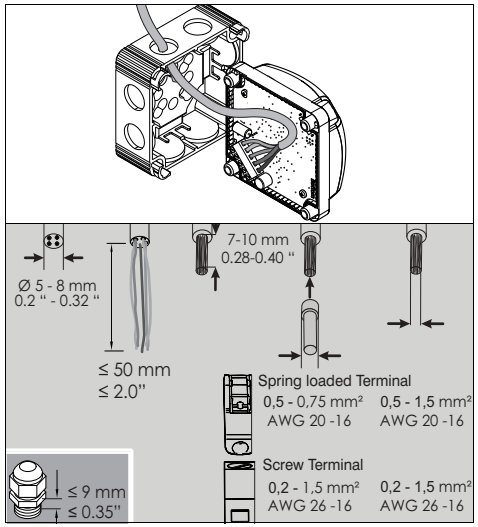

LED (853 x20 xx)

12V - 24 V
48 V
115 V - 230 V

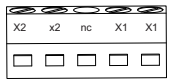

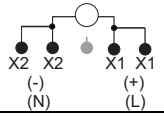

Leuchtbild, Light effect, Effet lumineux	
Dauerleuchte/Permanent/Feu fixe	
853 x00 54	12 VDC, ≤ 180 mA, I_0 < 1250 mA
853 x00 55	24 VDC, ≤ 80 mA, I_0 < 500 mA
853 x00 66	48 VAC, ≤ 35 mA, I_0 < 200 mA
853 x00 60	115-230VAC, ≤ 40 mA, I_0 < 7 A
Doppelblitz/Double Flash/Double Flash	
853 x10 54	12 VDC, ≤ 100 mA, I_0 < 1250 mA
853 x10 55	24 VDC, ≤ 80 mA, I_0 < 500 mA
853 x10 66	48 VAC, ≤ 90 mA, I_0 < 2 A
853 x10 60	115-230 VAC,≤180 mA, I_0 < 7 A
EVS	
853 x20 54	12 VDC, ≤ 400 mA, I_0 < 1250 mA
853 x20 55	24 VDC, ≤ 200 mA, I_0 < 500 mA
853 x20 66	48 VAC, ≤ 95 mA, I_0 < 2 A
853 x20 60	115-230 VAC, ≤ 180 mA, I_0 < 7A

LED-Multicolour (853 480 55)

24V

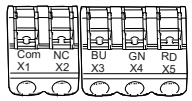

Colour		Technical Data
RD	Com X2 X3 X4 X5 (-, +24V)	80mA/ ~1,9 W
GN	Com X2 X3 X4 X5 (-, +24V)	70 mA/ ~1,7W
YE	Com X2 X3 X4 X5 (-, +24V +24V)	115mA/ ~ 2,7 W
WH	Com X2 X3 X4 X5 (-, +24V +24V +24V)	130mA/ ~ 3,4W
BU	Com X2 X3 X4 X5 (-, +24V)	70mA/ ~ 1,7 W
MOL	Com X2 X3 X4 X5 (-, +24V +24V)	125mA/ ~ 3W
CYAN	Com X2 X3 X4 X5 (-, +24V +24V)	120mA/ ~ 2,9W

LED-RGY (853 480 60)

230V

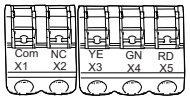

Colour		115 V		230 V
		50 Hz	60 Hz	50 Hz
RD	Com X2 X3 X4 X5 (N) (L)	14mA/ 0,55W	17mA/ 0,55W	22mA/ 1,15W
YE	Com X2 X3 X4 X5 (N) (L)	20mA/ 0,94W	24mA/ 0,94	35mA/ 2W
GN	Com X2 X3 X4 X5 (N) (L)	14mA/ 0,65W	17mA/ 0,65W	23mA/ 1,4W

7b Sounder 153

⚠ WARNING



Sounder 153 000 54
153 000 55

12V
24V

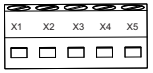

153 000 54	12VDC, ≤ 70 mA, I_0 < 500 mA
153 000 55	24VDC, ≤ 120 mA, I_0 < 500 mA

Tone	Tone Type		Frequencies
1	Dauerton Continuous continu	Com X2 X3 X4 X5 (-, +24V)	~ 3000 Hz
5	ansteigend rising montant	Com X2 X3 X4 X5 (-, +24V +24V)	~ 800- 970Hz @ 1Hz
6	ansteigend rising montant	Com X2 X3 X4 X5 (-, +24V, +24V)	~2400-2850 Hz @ 7 Hz
7	abfallend falling incline	Com X2 X3 X4 X5 (-, +24V +24V +24V)	1200-500 Hz @ 1 Hz
Tone -10 dB	Volume max. = off Volume - 10 dB = on	Com X2 X3 X4 X5 (-, +24V +24V +24V +24V)	

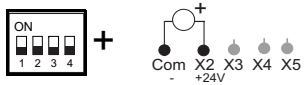

Tone	Code	Tone Type	Frequencies
1	**000x**	Dauerton Continuous continu	~ 3000 Hz
2	**001x**	Hupenton horn tone trompe	~ 110 Hz
3	**010x**	1Hz Ton 1Hz tone 1Hz ton	~ 3000 Hz
4	**011x**	20 Hz Trillerton 20 Hz whistle tone 20 Hz trille	~ 3000 Hz
5	**100x**	ansteigend rising montant	~ 800- 970Hz @ 2Hz
6	**101x**	ansteigend rising montant	~2400-2850 Hz @ 7 Hz
7	**110x**	abfallend falling incline	1200-500 Hz @ 0,7 Hz
8	**111x**	alternierend alternatig alternant	800/1200 Hz @ 1 Hz
Tone -10 dB	**xxx1**	Volume max. = off Volume - 10 dB = on	

Sounder 153 000 60
153 000 66

48V
115...230V

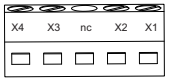

153 000 60	115-230VAC, ≤ 150mA, I_0 < 7A
153 000 66	48VAC, ≤ 150 mA, I_0 < 2A

Tone	Tone Type		Frequencies
1	Dauerton Continuous continu	X4 X3 nc X2 X1 (N) (L)	~ 3000 Hz
Tone -10 dB	Volume max. = off Volume - 10 dB = on	X4 X3 nc X2 X1 (N) (L) (L)	

NOTICE

8 853 x10 60, 853 x10 66 853 x20 60, 853 x20 66 153 000 60, 153 000 66

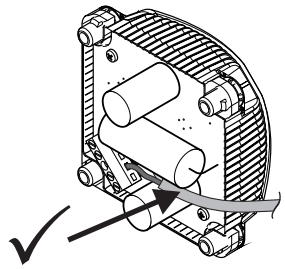

9

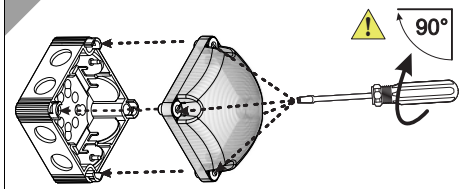

931085300101_AL
310.853.001

© Ⓓ

WERMA®