Tapered roller bearings, single row

| Principal dimensions | | | Basic load ratings | | Speed ratings | | Designation |
|---|---|---|---|---|---|---|---|
| | | | dynamic | static | Reference speed | Limiting speed | |
| d | D | T | C | C0 | | | * SKF Explorer bearin |
| mm | | | kN | | r/min | | - |
| **28,575** | 57,15 | 19,845 | 45,7 | 51 | 9000 | 13000 | 1988/1922/Q |

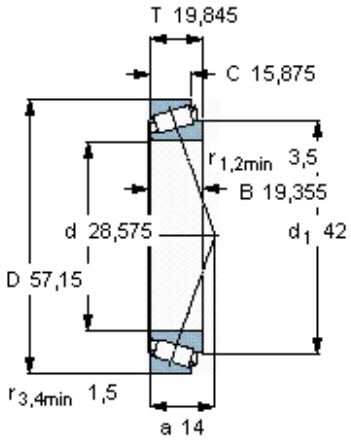


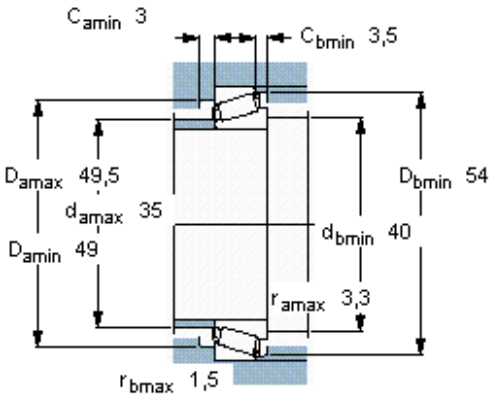


**Calculation factors**

e 0,33

Y 1,8

$Y_0$ 1