Industrial HRC Fuse

13.8 x 54.5mm, BS88, IEC 269-1
Offset Bolted Tags

NITD

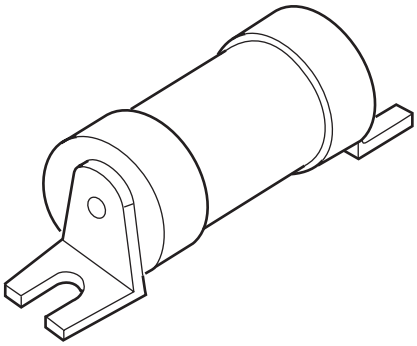

CATALOG SYMBOL: NITD
INDUSTRIAL HRC FUSE
OFFSET BOLTED TAGS
PACKAGE QUANTITY: 20
80kA INTERRUPTING RATING
MOUNTS IN CAMASTER SERIES OF HOLDERS

Dimensional Data:

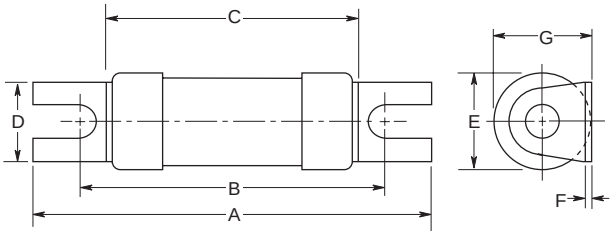

Time-Current Characteristic Curve (Full Size Curves Available)

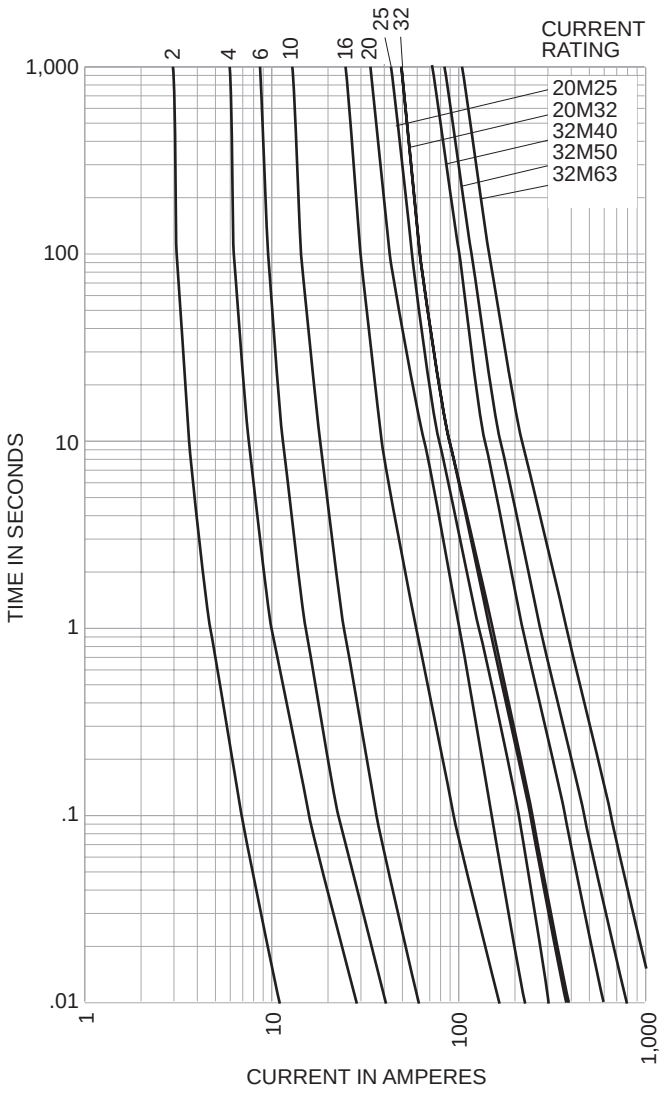

Electrical Characteristics

Catalog Number	Ampere Rating	I²T (Amp² Seconds) Pre-Arcing	I²T (Amp² Seconds) Total At 415V	I²T (Amp² Seconds) Total At 550V	Nom Watts Loss	Rated Voltage	Dimensions (Inches/mm) A	B	C	D	E	F	G
NITD2	2	1.3	4.6	5	0.9	550AC	55.2	42.5	1.36 34.6	0.44 11.1	13.7	0.03 0.8	0.56 14.0
NITD4	4	8	27	30	1.4								
NITD6	6	29	100	115	1.8								
NITD10	10	120	400	490	2.1								
NITD16	16	120	500	730	1.8								
NITD20	20	260	1070	1700	1.8								
NITD25	25	560	2300	3550	2								
NITD32	32	710	3000	5000	2.9								
NITD20M25	20M25	575	2300	3700	1.2								
NITD20M32	20M32	720	3000	6000	0.95								
NITD32M40	32M40	1500	6000	—	1.9	415AC	55.5	42.5	35.5	11.1	17.5	1.2	18.2
NITD32M50	32M50	2700	8600	—	1.4								
NITD32M63	32M63	5000	13,400	—	1.0								

The only controlled copy of this BIF document is the electronic read-only version located on the Bussmann Network Drive. All other copies of this BIF document are by definition uncontrolled. This bulletin is intended to clearly present comprehensive product data and provide technical information that will help the end user with design applications. Bussmann reserves the right, without notice, to change design or construction of any products and to discontinue or limit distribution of any products. Bussmann also reserves the right to change or update, without notice, any technical information contained in this bulletin. Once a product has been selected, it should be tested by the user in all possible applications.