

Image may differ from product. See technical specification for details.

# TXL 226

## Lip seal with internal gap-type seal

These seals provide effective sealing against many contaminants and allow for some grease to be purged when relubricating the bearing. Benchmark testing has proven low friction and outstanding service life. In highly contaminated environments, they provide the

first barrier in a three-barrier solution. When ordering, please note that one item (seal pack) contains two seals (pre-cut).

- Stiff and robust seal design using a high-performance proprietary material
- Very good protection from contamination
- Keep the lubricant in the housing and allow grease purging
- Low friction
- Seals made of alternative materials can be produced by SKF SEAL JET systems

# Overview

## Dimensions

| | |
|---|---|
| Shaft diameter | 145 mm |
| Housing groove diameter | 177.5 mm |
| Width | 15 mm |

## Properties

| | |
|---|---|
| Accessory type | Housing seal |
| Sealing type | Lip |
| Material | ECOPUR |

## Logistics

| | |
|---|---|
| Product net weight | 0.13 kg |
| eClass code | 23-05-17-90 |
| UNSPSC code | 31171519 |

# Technical specification

| | |
|---|---|
| Material | ECOPUR |

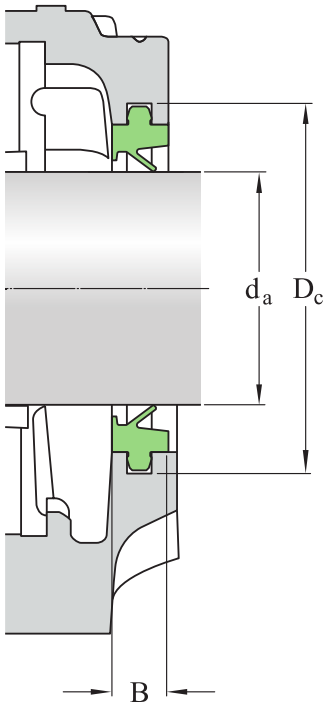


## Dimensions

| | | |
|---|---|---|
| $d_a$ | 145 mm | Shaft diameter |
| $D_c$ | 177.5 mm | Diameter of seal groove |
| B | 15 mm | Width |

## Temperature and speed

| | |
|---|---|
| Operating temperature | min. -30 °C |
| Operating temperature | max. 110 °C |
| Circumferential speed | max. 11 m/s |

## More Information

### Product details

Designs and variants

### Housing series

SNL 2, 3, 5, and 6 series

SNLN 30 series

SNL 30, 31, and 32 series

SONL series

SAF and SAW series (inch dimensions)

### Related documents

SKF bearing housings and roller bearing units (15.5 MB)

# Terms of use

By accessing and using this website / app owned and published by AB SKF (publ.) (556007-3495 · Gothenburg) (“SKF”), you agree to the following terms and conditions:

### Warranty Disclaimer and Limitation of Liability

Although every care has been taken to assure the accuracy of the information on this website / app, SKF provides this information "AS IS" and DISCLAIMS ALL WARRANTIES, EXPRESS OR IMPLIED, INCLUDING, BUT NOT LIMITED TO, IMPLIED WARRANTIES OF MERCHANTABILITY AND FITNESS FOR A PARTICULAR PURPOSE. You acknowledge that your use of this website / app is at your sole risk, that you assume full responsibility for all costs associated with use of this website / app, and that SKF shall not be liable for any direct, incidental, consequential, or indirect damages of any kind arising out of your access to, or use of the information or software made available on this website / app.

Any warranties and representations in this website / app for SKF products or services that you purchase or use will be subject to the agreed upon terms and conditions in the contract for such product or service.

Further, for non-SKF websites / apps that are referenced in our website / app or where a hyperlink appears, SKF makes no warranties concerning the accuracy or reliability of the information in these websites / apps and assumes no responsibility for material created or published by third parties contained therein. In addition, SKF does not warrant that this website / app or these other linked websites / apps are free from viruses or other harmful elements.

### Third Party Services

When viewing YouTube content via the SKF website(s) (i.e. using YouTube API Services), you agree to be bound by the YouTube Terms of Service.

### Copyright

Copyright in this website / app copyright of the information and software made available on this website / app rest with SKF or its licensors. All rights are reserved. All licensed material will reference the licensor that has granted SKF the right to use the material. The information and software made available on this website / app may not be reproduced, duplicated, copied, transferred, distributed, stored, modified, downloaded or otherwise exploited for any commercial use without the prior written approval of SKF. However, it may be reproduced, stored and downloaded for use by individuals without prior written approval of SKF. Under no circumstances may this information or software be supplied to third parties.

This website /app includes certain images used under license from Shutterstock, Inc.

### Trademarks and Patents

All trademarks, brand names, and corporate logos displayed on the website / app are the property of SKF or its licensors, and may not be used in any way without prior written approval by SKF. All licensed trademarks published on this website / app reference the licensor that has granted SKF the right to use the trademark. Access to this website / app does not grant to the user any license under any patents owned by or licensed to SKF.

### Changes

SKF reserves the right to make changes or additions to this website / app at any time.