Product data sheet
Characteristics

XMLP025BC270
pressure transmitter - XMLP - 25 bar - 7/16 male - 4..20mA - DIN - set of 1



Main

Range of product	OsiSense XM
Product or component type	Electronic pressure sensors
Pressure sensor type	Pressure transmitter
Pressure sensor name	XMLP
Electrical circuit type	Control circuit
Pressure sensor size	25 bar
Local display	Without
Controlled fluid	Fresh water 0...135 °C Air -40...135 °C Hydraulic oil -40...135 °C Gas -40...135 °C Refrigeration fluid -40...135 °C
Fluid connection type	SAE 7/16-20UNF-2A (male)
Electrical connection	1 male connector EN 175301-803-A (ex DIN43650) 3 pins
[Us] rated supply voltage	12...24 V DC SELV, voltage limits: 7...33 V
Current consumption	< 23 mA
Type of output signal	Analogue
Analogue output function	4...20 mA, 2-wire
Quantity per set	Set of 1
Type of packing	Individual

Complementary

Pressure setting range	0...25 bar
Maximum permissible accidental pressure	75 bar
Destruction pressure	150 bar
Materials in contact with fluid	Stainless steel AISI 316L
Operating position	Any position
Protection type	Reverse polarity

Disclaimer: This documentation is not intended as a substitute for and is not to be used for determining suitability or reliability of these products for specific user applications

	Load short-circuit
Electromagnetic compatibility	1.2/50 µs shock waves immunity test conforming to EN/IEC 61000-4-5 - test level 1 kV (f = 42 Ohm) Immunity to magnetic fields conforming to EN/IEC 61000-4-8 - test level 100 A/m (f = 50 Hz) Electrical fast transient/burst immunity test conforming to EN/IEC 61000-4-4 - test level 4 kV Susceptibility to electromagnetic fields conforming to EN/IEC 61000-4-3 - test level 10 V/m (f = 80...3000 MHz) Radiated RF fields conforming to EN/IEC 61000-4-6 - test level 10 V (f = 0.01...80 MHz) Electrostatic discharge immunity test conforming to EN/IEC 61000-4-2 - test level 8 kV air, 4 kV contact
[Uimp] rated impulse withstand voltage	0.5 kV
Response time on output	<= 2 ms for 10...90 % of full scale
Measurement accuracy	+/- 0.5 % of the measuring range
Accuracy	0.1 % of the measuring range
Drift of the sensitivity	+/- 0.02 % of measuring range/°K
Drift of the zero point	+/- 0.02 % of measuring range/°K
Mechanical durability	>= 10000000 cycles
Product weight	0.103 kg
Diameter	26 mm
Length	58.5 mm

Environment

Standards	NSF ANSI 61 EN/IEC 61326-2-3
Product certifications	CE cULus EAC RCM
Protective treatment	TC
Ambient air temperature for operation	-30...85 °C
Ambient air temperature for storage	-50...100 °C
Vibration resistance	20 gn (f = 15...2000 Hz) conforming to EN/IEC 60068-2-6
Shock resistance	100 gn for 11 ms conforming to EN/IEC 60068-2-27
IP degree of protection	IP65 conforming to EN/IEC 60529

Offer Sustainability

Sustainable offer status	Green Premium product
RoHS (date code: YYWW)	Compliant - since 1723 - Schneider Electric declaration of conformity Schneider Electric declaration of conformity
REACh	Reference not containing SVHC above the threshold Reference not containing SVHC above the threshold
Product environmental profile	Available
Product end of life instructions	Need no specific recycling operations

XMLP025BC270

Dimensions

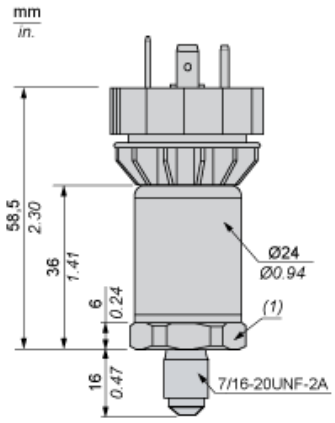

(1) SW24 tightening torque ≤ 10 N.m / 88.5 lb-in

Wiring Diagram

2-Wire Technique (4-20 mA)

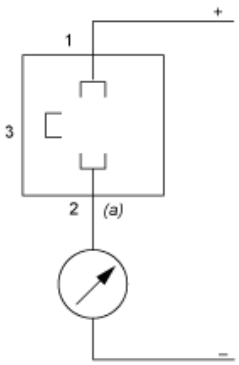

(a) I out

Curves

