Brand of NTN corporation

Technical data

UKFE211H

Bearing units



Grey cast housing, radial insert ball bearing with adapter sleeve,seal with slinger.
Deviation from figure: For some sizes, the bearing inserts may protrude beyond the mounting surface of the housing.

KIT CONTENT

UK211G2H, FE211

VISUAL (S)

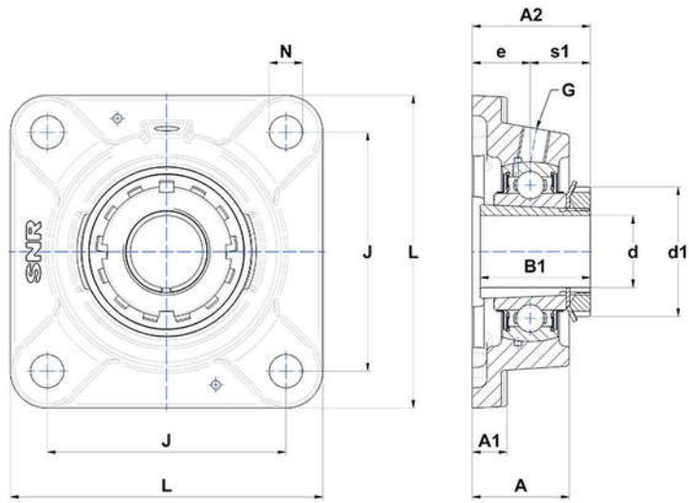

PRODUCT DEFINITION

Brand	SNR
A - Housing height	48,5 mm
A1 - Housing foot height / flange height	15 mm
A2 - Total height from mounting surface	60 mm
B - Width of Inner Ring	33 mm

PRODUCT DEFINITION	
B1 - Overall width Inner Ring	59 mm
d - Shaft diameter	50 mm
d1 - Outer dia of eccent. Lock. collar / nut of adapter sleeve	75 mm
e - Distance mounting surface to bearing center	31 mm
G - Grease fitting	R1/8"
J - Mounting holes distance	130 mm
L - Housing width / diameter	162 mm
N - Mounting hole dimension	18 mm
s1 - Distance nut to middle of bearing raceway	29 mm

PRODUCT PERFORMANCE	
C - Dynamic load rating	43550000 mN
C0 - Static load rating	29200000 mN
Operating temperature min.	253,15 °K
Operating temperature max.	373,15 °K

OTHER FEATURES	
Mass	3,75 kg
Adapter sleeve designation	H2311