Product Details

A090 Plastic Base/Mild Steel Plated Stud



Materials

Base - Polyamide Reinforced Nylon
Stud - Mild Steel, Electroless Nickel Plated

Part No.	Thread Size D1 (mm)	Thread Length L (mm)	Base Diameter D2 (mm)	Overall Height H (mm)	Maximum Recommended Load (kg)
A090/020	M12	75	55	102	600
A090/021	M12	125	55	152	600
A090/022	M12	150	55	177	600
A090/010	M12	75	70	108	1000
A090/011	M12	125	70	158	1000
A090/006	M12	150	70	183	1000
A090/005	M16	75	70	111	1500
A090/023	M16	125	70	161	1500
A090/001	M16	150	70	186	1500
A090/004	M16	200	70	236	1500
A090/013	M16	75	100	119	2000
A090/034	M16	125	100	169	2000
A090/014	M16	150	100	194	2000
A090/015	M16	200	100	244	2000
A090/038	M20	125	100	175	2000
A090/003	M20	150	100	200	2000
A090/002	M20	200	100	250	2000

A090/036	M24	125	100	179	2000
A090/007	M24	150	100	204	2000
A090/016	M24	200	100	254	2000
A090/037	M24	250	100	304	2000

Dimensions are approximate

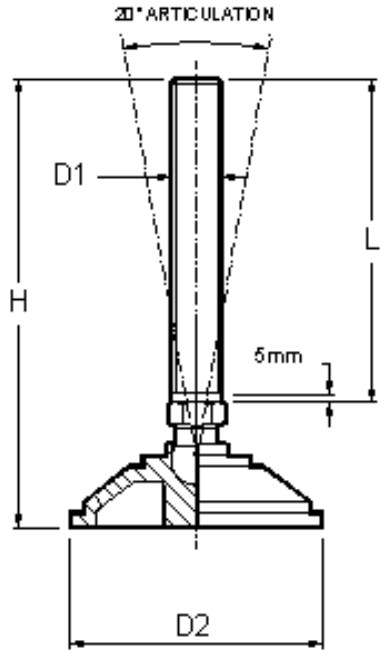

Registered Design