OsiSense™ XS
Inductive proximity sensors
General purpose, Plastic case, 40 x 40 x 117 mm, plug-in, 5 position turret head

Sensor			Flush mountable in metal		Non-flush mountable in metal
			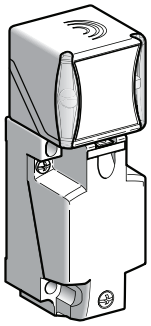		
Nominal sensing distance (Sn)			15 mm (0.59 in.)	20 mm (0.78 in.)	40 mm (1.57 in.)
Catalog Numbers					
4-wire ⎓	PNP	NO+NC	–	**XS8C4A1PCP20**	**XS8C4A4PCP20**
	NPN	NO+NC	–	**XS8C4A1NCP20**	**XS8C4A4NCP20**
2-wire ⎓ *Available 3rd quarter 2012.*	NO or NC programmable		**XS7C4A1DPP20**	**XS8C4A1DPP20**	**XS8C4A4DPP20**
2-wire (∿/⎓) unprotected *(1)* *Available 3rd quarter 2012.*	NO or NC programmable		**XS7C4A1MPP20**	**XS8C4A1MPP20**	**XS8C4A4MPP20**
Weight, kg (lb)			0.244 (0.537)	0.244 (0.537)	0.244 (0.537)

*The sensors have and a 1/2 - 20 UNF connector. For 1/2" NPT conduit fitting and screw terminals, change suffix P20 to **N12** (for example XS8C4A1MP**N12**). For a Pg 13.5 conduit fitting and screw terminals, change suffix P20 to **G13** (for example XS8C4A4PC**G13**). For a 4 pin connector, change suffix P20 to **M12**. For a 7/8" mini connector, change suffix P20 to **U78**.*

Specifications

Operating zone		0–12 mm (0–0.47 in.)	0–16 mm (0–0.62 in.)	0–32 mm (0–1.25 in.)
Product certifications		UL, CSA, CE. TÜV (4-wire versions)		
Conformity to standards		IEC 60947-5-2		
Conformity to safety standards *(2)*	For XS8C4A●PCP20	EN 62061 (2005): SILcl2, EN 61508 (2010): SIL 2, EN ISO 13849 (2008): PL d		
Reliability data *(2)*	For XS8C4A●PCP20	MTTFd = 1546 years; PFHd = 7.4 10-8 1/h		
Connection		Screw terminals, clamping capacity: 2 or 4 x 1.5 mm² *(3)*		
Differential travel		3–15% of Sr		
Degree of protection	Conforming to IEC 60529 and DIN 40050	IP65, IP67 and IP69K		
Temperature	Storage	−40 to +85 °C (−40 to +185 °F)		
	Operation *(4)*	−25 to +70 °C (−13 to +158 °F)		
Material		Case: PBT		
Vibration resistance	Conforming to IEC 60068-2-6	25 gn, amplitude ±2 mm (10–55 Hz)		
Shock resistance	Conforming to IEC 60068-2-27	50 gn for 11 ms		
Indicators	Output state	Yellow LED		
	Power on	Green LED, for 4-wire ⎓ and 2-wire ∿/⎓ versions		
Rated supply voltage	4-129wire ⎓	12–48 V with protection against reverse polarity		
	2-wire ⎓	12–48 V with protection against reverse polarity		
	2-wire ∿/⎓	24–240 V (∿ 50/60 Hz)		
Voltage limits (including ripple)	4-wire ⎓	10–58 V		
	2-wire ⎓	10–58 V		
	2-wire ∿/⎓	20–264 V		
Current consumption, no-load	4-wire ⎓	< 15 mA		
Residual current, open state	2-wire ⎓	< 0.6 mA		
	2-wire ∿/⎓	1.5 mA		
Switching capacity	4-wire ⎓	< 200 mA with overload and short-circuit protection		
	2-wire ⎓	< 100 mA with overload and short-circuit protection		
	2-wire ∿/⎓	∿: 5–300 mA *(1)* ⎓: 5–200 mA *(1)*		
Voltage drop, closed state	4-wire ⎓	< 2 V		
	2-wire ⎓	< 4.2 V		
	2-wire ⎓/∿	< 5.5 V		
Maximum switching frequency		< 300 Hz (flush mountable) < 200 Hz (non-flush mountable)		
Delays	First-up	< 7 ms		
	Response	Flush mountable: ≤ 1.2 ms. Non-flush mountable: ≤ 1.4 ms		
	Recovery	Flush mountable: ≤ 1.8 ms. Non-flush mountable: ≤ 2.5 ms		

*(1) Sensor must be protected by a 0.4 A fast-acting fuse (**XUZE04**) connected in series with the load (see page 2/129).*
(2) SIL 2 protection can only be obtained by connecting both outputs to a safety PLC. Refer to catalog MKTED208051EN-US, Preventa Machine Safety Products.
*(3) These sensors come without a cable connector. An adaptable Pg 13.5 cable connector is available (reference **XSZ PE13**). Accessories are available for connection to an M12 or 7/8"-16UN connector, which can be added to the Pg 13.5 sensor. Consult the Customer Care Center (1-800-435-2121).*
*(4) Sensors are available for very low temperatures with suffix **TF**, –40 to +70 °C (–40 to +158 °F) or very high temperatures with suffix **TT**, –25 to +85 °C (–13 to +185 °F). Consult the Customer Care Center (1-800-435-2121).*

OsiSense™ XS
Inductive proximity sensors
General purpose, Plastic case, 40 x 40 x 117 mm, plug-in, 5 position turret head

Minimum mounting distances (mm)

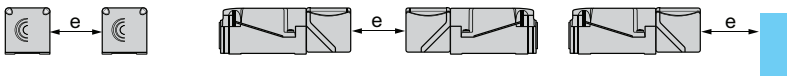

		Side by side	Face to face	Facing a metal object
Sensors flush mountable in metal	XS7C4A1●●	e ⩾ 60	e ⩾ 120	e ⩾ 45
	XS8C4A1●●	e ⩾ 80	e ⩾ 160	e ⩾ 60
Sensors non-flush mountable in metal	XS8C4A4●●	e ⩾ 160	e ⩾ 320	e ⩾ 120

Wiring diagrams

NO + NC outputs

4-wire ⎓

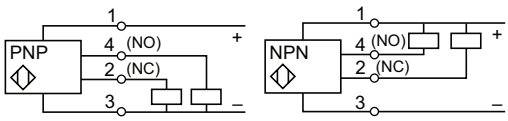

NO or NC outputs, depending on position of link

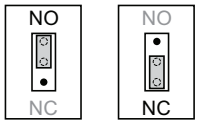

2-wire ⎓ (non-polarized)

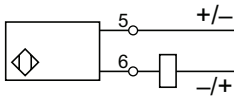

2-wire ∿ or ⎓ (programmable)

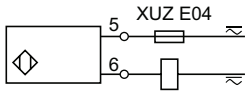

Dimensions (mm)

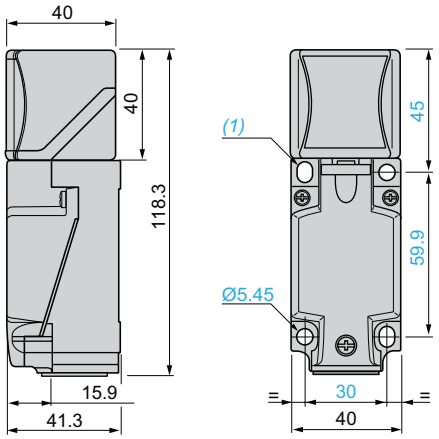

Head positions

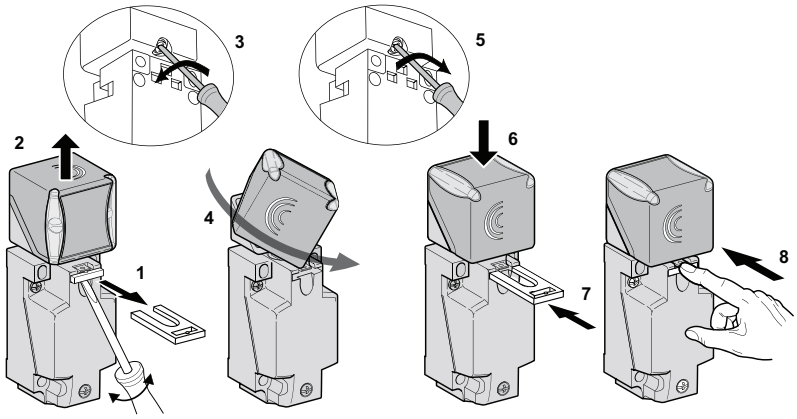

(1) 2 elongated holes Ø 5.3 x 7 cm.
Tightening torque of cover mounting screws and clamp screws: < 1.2 N•m (10.6 lb-in)

Example SIL 2 wiring diagram (with Preventa XPSMF40 safety PLC)

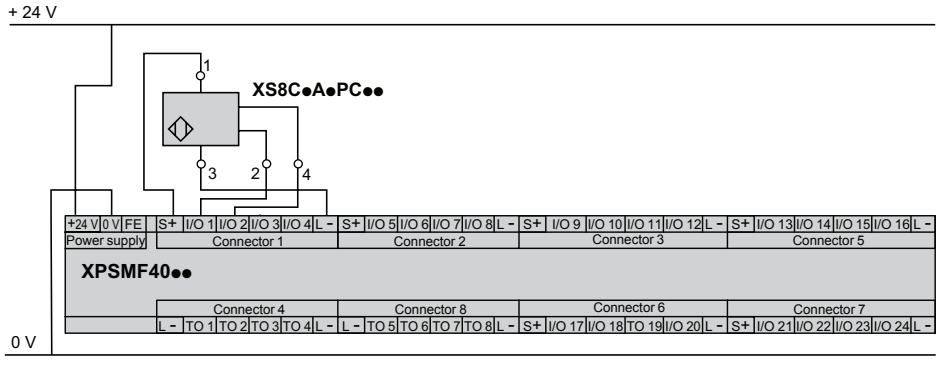

SFF (safe failure fraction): 92.68 %
DC (diagnosis coverage): 75.8 %

S+: 24 V
L -: 0 V
I/O 1–24: safety I/O