

Retroreflective sensor
OBR5000-18GK40A-E2

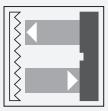

- Short design in M18 plastic housing
- Not sensitive to ambient light
- Degree of protection IP67
- Very high detection range

Retroreflective sensor

Function

The optical sensors of this series have an M18 threaded housing that is optionally available in plastic or metal.
The sensors are robust and versatile.
Focusing on the essential requirements simplifies selection and commissioning, saving time and costs.

Dimensions

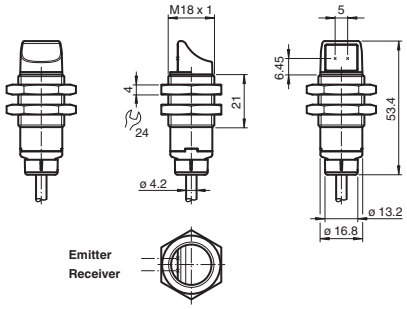

Technical Data

General specifications	
Effective detection range	0 ... 5 m
Reflector distance	0 ... 5 m
Threshold detection range	7 m
Reference target	reflector C110-2
Light source	LED
Light type	modulated visible red light
Polarization filter	yes
Diameter of the light spot	approx. 270 mm at 5 m
Opening angle	approx. 2.6 °
Optical face	lateral
Ambient light limit	EN 60947-5-2 40000 Lux
Functional safety related parameters	

Release date: 2022-05-12 Date of issue: 2022-05-12 Filename: 70113328-100083_eng.pdf

Technical Data

$MTTF_d$		1552 a
Mission Time (T_M)		20 a
Diagnostic Coverage (DC)		0 %
Indicators/operating means		
Operation indicator		LED green: on - power on flashing (4 Hz) - short circuit
Function indicator		Yellow LED: Permanently lit - light path clear Permanently off - object detected Flashing (4 Hz) - insufficient operating reserve
Electrical specifications		
Operating voltage	U_B	10 ... 30 V DC
Ripple		max. 10 %
No-load supply current	I_0	< 25 mA
Protection class		III
Output		
Switching type		Q - Pin4: PNP normally open / dark-on
Signal output		1 PNP output, short-circuit protected, reverse polarity protected, open collector
Switching voltage		max. 30 V DC
Switching current		max. 100 mA , resistive load
Voltage drop	U_d	≤ 1.5 V DC
Switching frequency	f	500 Hz
Response time		≤ 1 ms
Conformity		
Product standard		EN 60947-5-2
Approvals and certificates		
UL approval		E87056 , cULus Listed , class 2 power supply , type rating 1
Ambient conditions		
Ambient temperature		-40 ... 60 °C (-40 ... 140 °F)
Storage temperature		-40 ... 70 °C (-40 ... 158 °F)
Mechanical specifications		
Degree of protection		IP67
Connection		2 m fixed cable
Material		
Housing		PC (Polycarbonate)
Optical face		PMMA
Cable		PVC
Mass		approx. 56 g

Connection

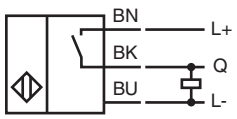

Release date: 2022-05-12 Date of issue: 2022-05-12 Filename: 70113328-100083_eng.pdf

Indication

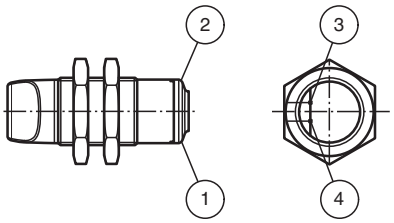

1	Operating display	green
2	Signal display	yellow
3	Emitter	
4	Receiver	

Characteristic Curve

Characteristic response curve

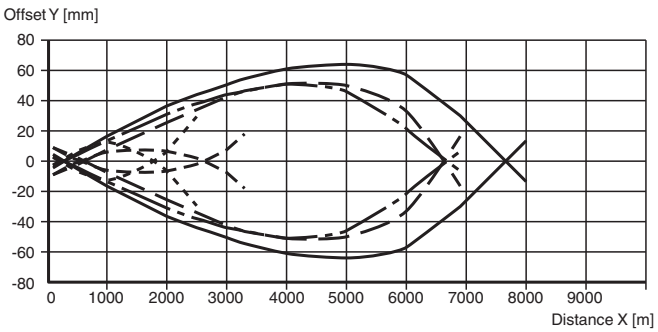

Relative received light strength

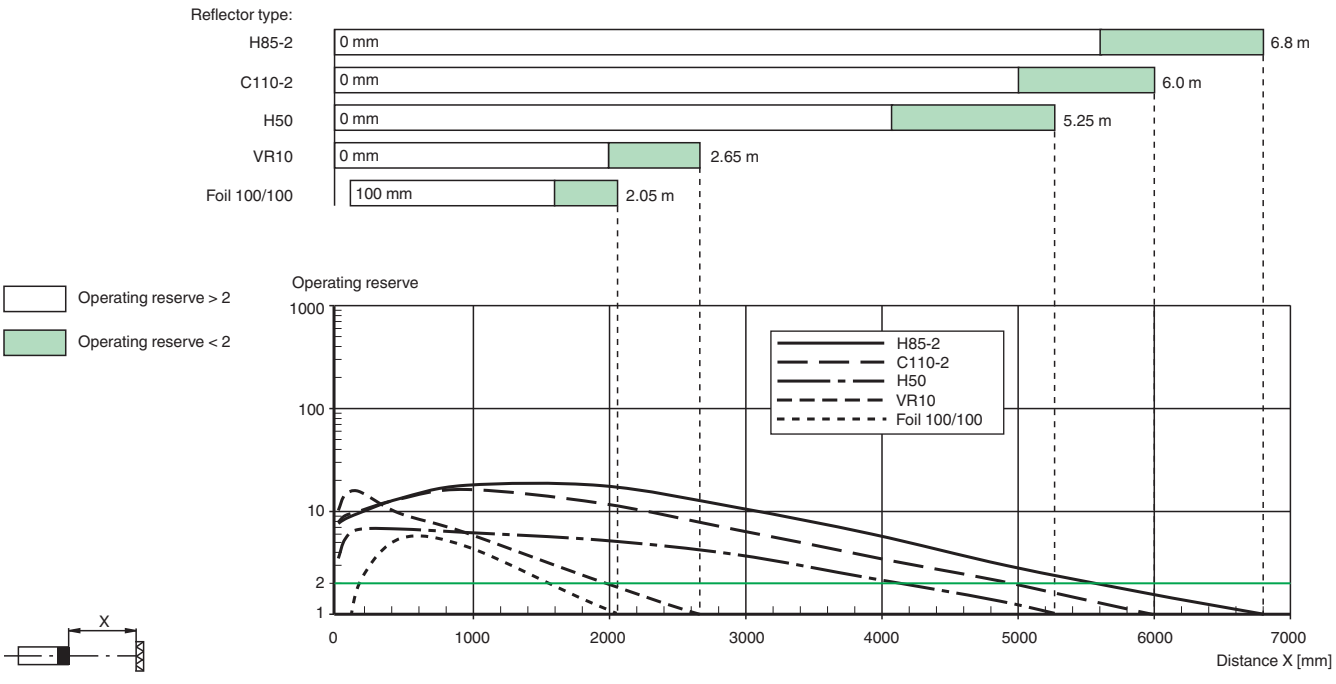

Accessories

	**BF 18**	Mounting flange, 18 mm
	**CPZ18B03**	Mounting Bracket with swivel nut

Release date: 2022-05-12 Date of issue: 2022-05-12 Filename: 70113328-100083_eng.pdf

Accessories

	**BF 18-F**	Plastic mounting adapter, 18 mm
	**BF 5-30**	Universal mounting bracket for cylindrical sensors with a diameter of 5 ... 30 mm
	**OMH-04**	Mounting aid for round steel ø 12 mm or sheet 1.5 mm ... 3 mm
	**REF-H85-2**	Reflector, rectangular 84.5 mm x 84.5 mm, mounting holes
	**REF-C110-2**	Reflector, round ø 84 mm, central mounting hole
	**REF-H50**	Reflector, rectangular 51 mm x 61 mm, mounting holes, fixing strap
	**REF-VR10**	Reflector, rectangular 60 mm x 19 mm, mounting holes
	**OFR-100/100**	Reflective tape 100 mm x 100 mm

Release date: 2022-05-12 Date of issue: 2022-05-12 Filename: 70113328-100083_eng.pdf