55000 SERIES
VDE APPROVED TOGGLE SWITCHES

EN 61058-1

- The switches described below are marked VDE as standard.
- UL and CSA agency approvals are also available. To order a switch marked UL or CSA, please complete “Other agency approvals" box.

ELECTRICAL SPECIFICATIONS

- Class I (normal insulation)
- Small contact opening : µ (< 3 mm (.118))
- Current/voltage rating with resistive load : 3A 250VAC - 6A 125VAC
- Dielectric strength :
  2.000 Vrms 50 Hz min. between poles and between terminals and frame
  1.000 Vrms 50 Hz min. between terminals
- Special body for increased creepage distance and air gap : 3 mm (.118)

MATERIALS

- Contacts : silver
- Case : diallylphthalate (DAP)
- Actuator : brass, chrome plated with insulating vinyl cap
- Bushing : brass, nickel plated
- Housing : stainless steel
- Terminal seal : epoxy

GENERAL SPECIFICATIONS

- Insulating cap, compulsory, supplied glued on the lever :
  U270 for models 55600A, 55200A and 55200ZA
  U1040 for models 55200WA and 55200WA X433
- Ground connector :
  U721 compulsory if the panel is not metallic or not connected to ground
- Epoxy sealed terminals standard

Further specifications, see 5000 series.

MODEL STRUCTURE

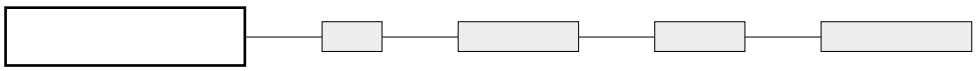

Solder lugs

→ Keyway

		III	II	I
		2-3		1-2
		5-6		4-5
Single pole	Double pole			
55636A	**55646A**	ON	-	ON
55639A	**55649A**	ON	OFF	ON

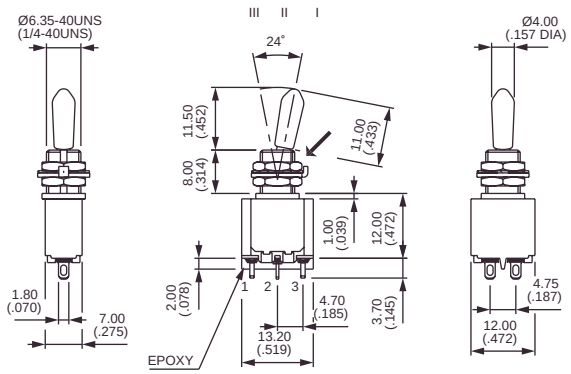

Also available with Ø 6 mm (.236) bushing : **55500**.

Straight PC terminals

→ Keyway

		III	II	I
		2-3		1-2
		5-6		4-5
Single pole	Double pole			
55236A	**55246A**	ON	-	ON
55239A	**55249A**	ON	OFF	ON

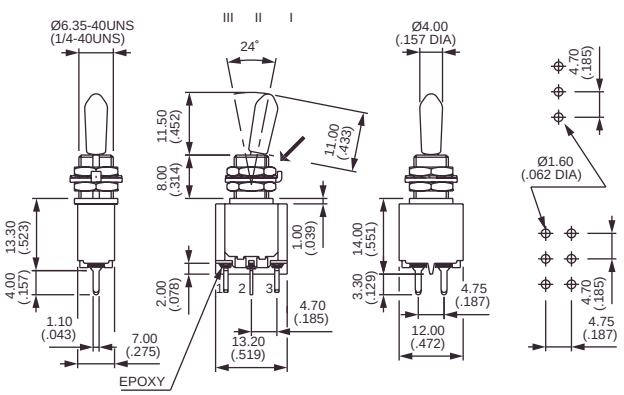

Also available with Ø 6 mm (.236") bushing : **55100**.

Right angle terminals - horizontal

	III	II	I
	2-3		1-2
	5-6		4-5

Single pole	Double pole*			
55236WA	**55246WA X433**	ON	-	ON
55239WA	**55249WA X433**	ON	OFF	ON

"X433" to be placed in the third box of ordering format.

Also available for VERTICAL mounting (on request).

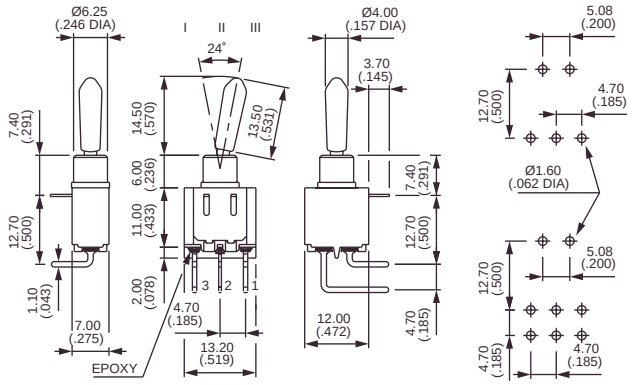

Quick-connect terminals

→ Keyway

	III	II	I
	2-3		1-2
	5-6		4-5

Single pole	Double pole			
55236ZA	**55246ZA**	ON	-	ON
55239ZA	**55249ZA**	ON	OFF	ON

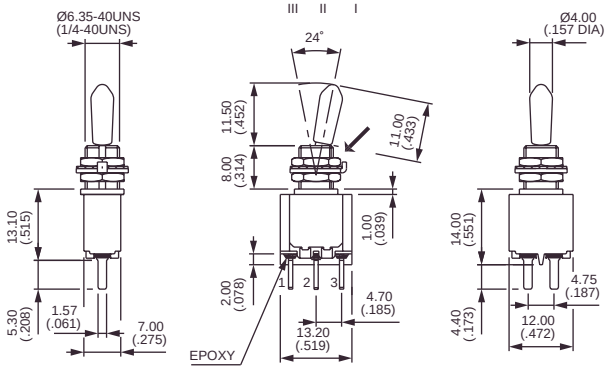

PANEL CUT-OUT

Bushing Ø 6,35 (1/4)

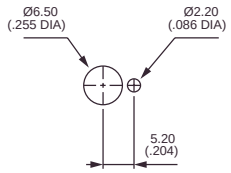

Bushing Ø 6 (.236)

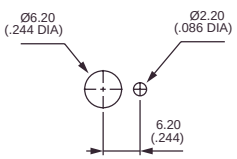

* In double pole W models, spacing between poles on PCB is different from standard : 4,7 mm (.185) instead of 3,81 mm (.150)

LEVERS

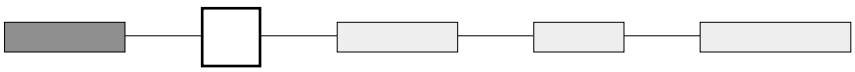

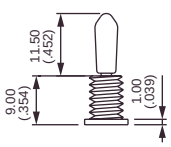

-13

For threaded bushing models
Cap U270 compulsory

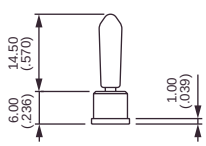

-13

For plain bushing models
Cap U1040 compulsory

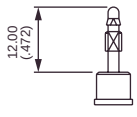

-4N

For use with paddles only

LEVERS (continued)

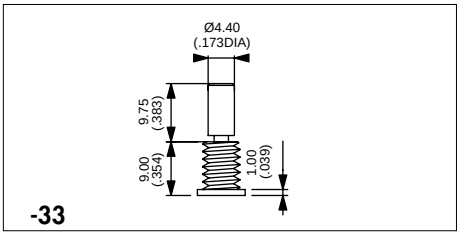

For threaded bushing models

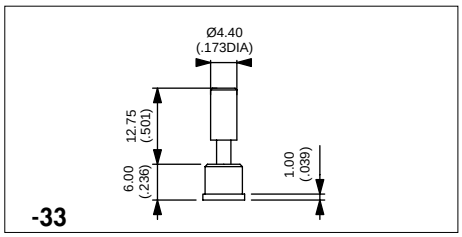

For plain bushing models

OTHER AGENCY APPROVALS

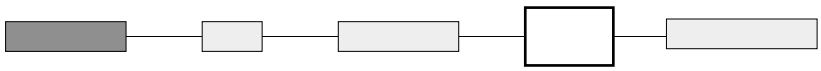

UL - CSA

To order a switch additionally marked UL and/or CSA, complete above box with desired approvals.

INSULATING CAPS AND PADDLES

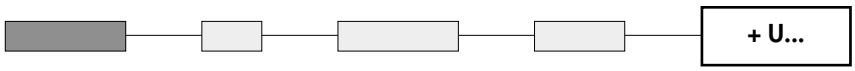

Insulating caps

Compulsory - delivered assembled on the lever - not available in ivory colour

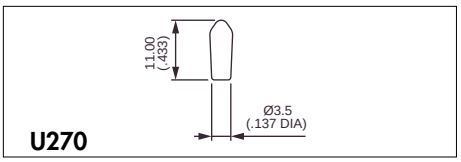

For threaded bushing models

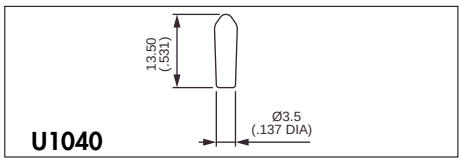

For plain bushing models

Cap/paddle colours	
Replace last "0" by number	
1	blue
2	black
3	green
4	grey
5	yellow
7	ivory
7/1	white
9	orange

Paddles

For use with lever 4N only**.** Shown with threaded bushing. Order separately.

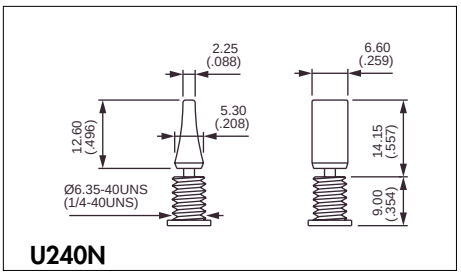

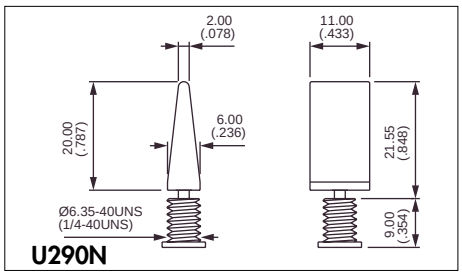

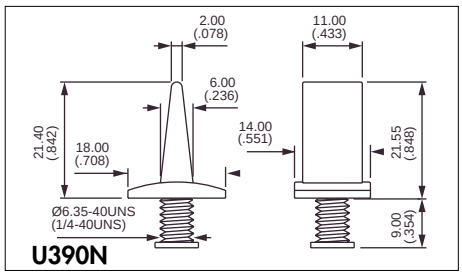



GROUND CONNECTOR

IMPORTANT : compulsory on models with threaded bushing if the panel is not metallic or not connected to ground. Order separately.

