YAR 204-2F

Dimensions

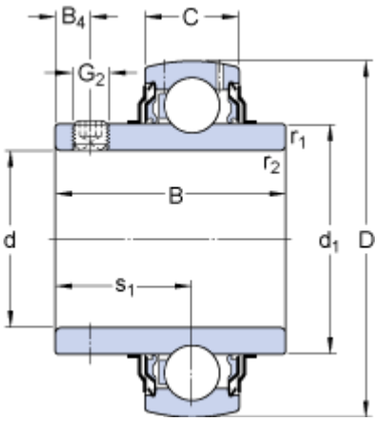

d		20	mm
D		47	mm
B		31	mm
C		14	mm
d_1	≈	28.2	mm
B_4		4.5	mm
$r_{1,2}$	min.	0.6	mm
s_1		18.3	mm

Calculation data

Basic dynamic load rating	C	12.7	kN
Basic static load rating	C_0	6.55	kN
Fatigue load limit	P_u	0.28	kN
Limiting speed [1)]		8500	r/min
Calculation factor	f_0	13	

Mass

Mass complete bearing	0.15	kg

Mounting information

Thread grub screw	G_2	M6x0.75	
Hexagonal key size for grub screw	N	3	mm
Recommended tightening torque for grub screw		4	N·m

Assosiated products

Rubber seating ring	RIS 204