AutoReel Pro

Multipurpose hose reel
air, water, (40° max), herbicides, pesticides...



Equipped with
TECHNOBEL® PU

Shell and
Wall bracket in
polypropylene
high resistance

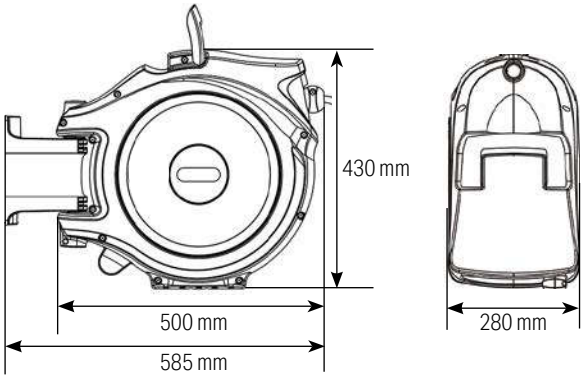



With security
locked system



With brass fittings
BSP 1/4" B.S.P.T.

- Servicing workshops
- Garages
- Assembly factories
- Process industries
- Joinery and cabinetwork
- Spraying vehicles



Swivel 180°



Removable

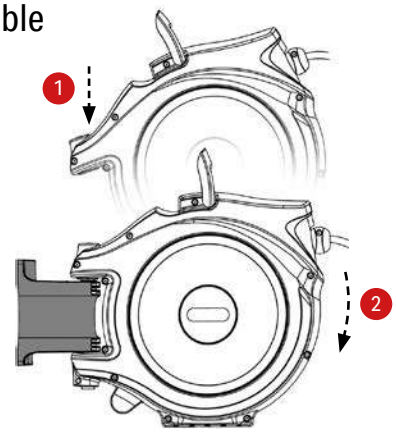

Automatic hose rewind



20 m
+2 m*

9,5 mm
14,5 mm

10 bar

40 bar

8 kg

* Feeder hose with BSP 1/4" thread

	Ref
One unit per pack (Wall bracket included)	2501 0000
Additional Wall Bracket with fixing screw	Z 71028