

ATyS S - ATyS d S

Remotely operated Transfer Switching Equipment

from 40 to 125 A

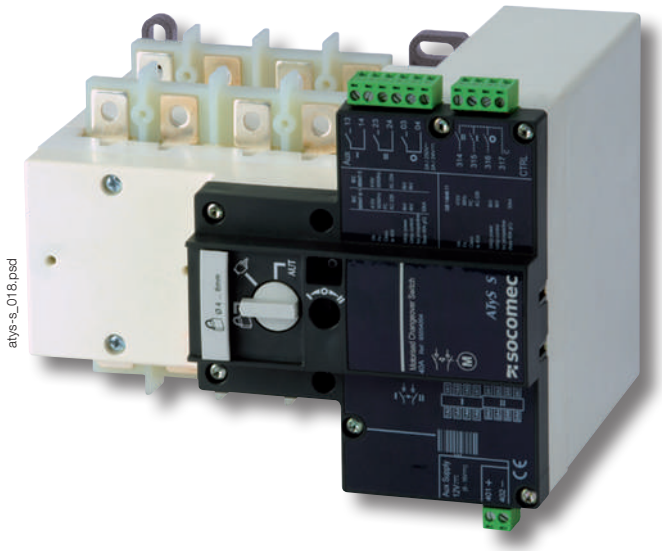

atys-s_018.psd

Function

ATyS S products are 4 pole remotely operated transfer switches with positive break indication.
They enable the on-load transfer of two three-phase supplies via remote volt-free contacts, from either an external automatic controller, using pulse logic, or a switch.
They are intended for use in low voltage power supply systems where a brief interruption of the load supply is acceptable during transfer.

Advantages

Extensive power supply range
The ATyS S is available in four supply versions, each with a broad range (+/-30%).
The four versions are:
- 12 VDC power supply.
- 24/48 VDC power supply.
- 230 VAC single power supply.
- 2 x 230 VAC dual power supply.

Safety and reliability
ATyS S products use stable position technology, ensuring constant pressure on the contacts and preventing premature faults. In addition, they do not require a power supply to maintain position, thus protecting their loads from voltage fluctuations.

Easy integration
ATyS S products can be easily installed inside enclosures. Their design, and in particular their compact size, enables integration within most 200 mm deep enclosures.

Simplified maintenance
Maintenance can be carried out easily under load, with manual operation still available.
The control and motorisation section can be replaced simply by removing 4 screws, with no work required on the installation cabling.

ATyS d S: Dual power supply
In addition to the functions offered by the ATyS S, the ATyS d S incorporates supply redundancy without the need for additional wiring. This is obtained by integrating a double supply (2 independent supplies) directly within the product.

The solution for

- Genset < 90 kVA
- Heating systems
- Climate control
- Ventilation systems
- Telecommunications

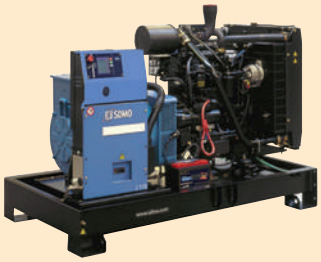

Strong points

- Extensive power supply range
- Safety and reliability
- Easy integration
- Simplified maintenance
- ATyS d S: Dual power supply

Conformity to standards

- IEC 60947-6-1
- IEC 60947-3
- GB/T 14048-11

Approvals and certifications

Enclosed ATyS S

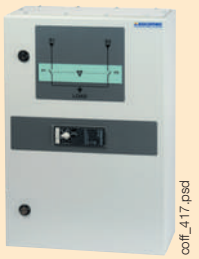

coff_417.psd

See "Enclosed transfer switches".

socomec Innovative Power Solutions

References

ATyS S

Rating (A)	No. of poles	Power supply	ATyS S	Bridging bars	Terminal shrouds	Voltage tap	Terminal retainer	DIN rail
40 A	4 P	24/48 VDC	9506 **4004**	4 P 9509 **4013**	Source side 2 pieces 9594 **4012** Load side 2 pieces 9594 **9012**		2 pieces 9599 **4003**	4 modules 9599 **4002**
	4 P	12 VDC	9505 **4004**					
	4 P	230 VAC	9503 **4004**			9599 **4001**		
63 A	4 P	24/48 VDC	9506 **4006**					
	4 P	12 VDC	9505 **4006**					
	4 P	230 VAC	9503 **4006**			9599 **4001**		
80 A	4 P	24/48 VDC	9506 **4008**					
	4 P	12 VDC	9505 **4008**					
	4 P	230 VAC	9503 **4008**			9599 **4001**		
100 A	4 P	24/48 VDC	9506 **4010**					
	4 P	12 VDC	9505 **4010**					
	4 P	230 VAC	9503 **4010**			9599 **4001**		
125 A	4 P	24/48 VDC	9506 **4012**					
	4 P	12 VDC	9505 **4012**					
	4 P	230 VAC	9503 **4012**			9599 **4001**		

ATyS d S

Rating (A)	No. of poles	Power supply	ATyS d S	Bridging bars	Terminal shrouds	Voltage tap	Terminal retainer	DIN rail
40 A	4 P	2 x 230 VAC	9513 **4004**	4 P 9509 **4013**	Source side 2 pieces 9594 **4012** Load side 2 pieces 9594 **9012**	9599 **4001**	2 pieces 9599 **4003**	4 modules 9599 **4002**
63 A	4 P	2 x 230 VAC	9513 **4006**					
80 A	4 P	2 x 230 VAC	9513 **4008**					
100 A	4 P	2 x 230 VAC	9513 **4010**					
125 A	4 P	2 x 230 VAC	9513 **4012**					

Accessories

Bridging bars

Use

For bridging power terminals on the top or bottom side of the switch.

Rating (A)	No. of poles	Reference
40 ... 125	4 P	9509 **4013**



Voltage tap

Use

Enables the required power supply for ATyS S 230 VAC and ATyS d S products to be tapped directly from the product's incoming power terminals. Can also be utilised in applications without neutral, to provide 400 VAC to the autotransformer.

Rating (A)	Reference
40 ... 125	9599 **4001**



Terminal retainer

Use

These clips have a dual function: - to prevent direct access to the power supply and control terminals and
- to secure these connector terminals.

Rating (A)	Pack	Reference
40 ... 125	2 pieces	9599 **4003**

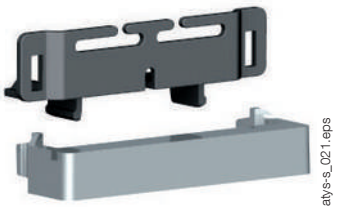

Accessories (continued)

Terminal shrouds

Use

IP2X protection against direct contact with terminals or connecting parts.

Terminal shrouds for the source side		
Rating (A)	**Pack**	**Reference**
40 … 125	2 pieces	9594 **4012**

Terminal shrouds for the load side		
Rating (A)	**Pack**	**Reference**
40 … 125	2 pieces	9594 **9012**


atys-s_020.eps


atys-s_023.eps

Autotransformer 400/230 VAC

Use

For applications without neutral, this autotransformer provides the 230 VAC required to power these ATyS products.

Dimensions

75 x 80 x 72 mm

Rating (A)	Reference
40 … 125	9599 **4004**

DIN rail

Use

This 4-module DIN rail can be installed directly on the front of the ATyS S and can be utilised, for example, for the installation of a surge protection device.

Rating (A)	Reference
40 … 125	9599 **4002**

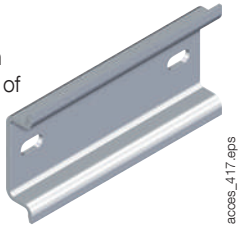
acces_417.eps

Spares

Manual emergency operation handle

Use

This handle can be used on the product whether the motor unit is mounted or not.

Rating (A)	Reference
40 … 125	9599 **5012**


poign_058.eps

Connector kit

Use

This kit, including all the connector types for the different products, can be ordered in case of loss or breaking of one connector.

Rating (A)	Reference
40 … 125	9509 **0002**


acces_416.eps

Characteristics according to IEC 60947-3 and IEC 60947-6-1

40 to 125 A

Thermal current I_{th} at 40°C		40 A	63 A	80 A	100 A	125 A
Rated insulation voltage U_i (V) (power circuit)		800	800	800	800	800
Rated impulse withstand voltage U_{imp} (kV) (power circuit)		6	6	6	6	6
Rated insulation voltage U_i (V) (control circuit)		300	300	300	300	300
Rated impulse withstand voltage U_{imp} (kV) (control circuit)		4	4	4	4	4
Rated operational currents I_e (A) according to IEC 60947-6-1						
Rated voltage	**Utilisation category**	**A/B**	**A/B**	**A/B**	**A/B**	**A/B**
415 VAC	AC-31 B	40	63	80	100	125
415 VAC	AC-32 B	40	63	80	80	80
Rated operational currents I_e (A) according to IEC 60947-3						
Rated voltage	**Utilisation category**	**A/B**	**A/B**	**A/B**	**A/B**	**A/B**
415 VAC	AC-20 A / AC-20 B	40/40	63/63	80/80	100/100	125/125
415 VAC	AC-21 A / AC-21 B	40/40	63/63	80/80	100/100	100/125
415 VAC	AC-22 A / AC-22 B	40/40	63/63	80/80	100/100	100/100
415 VAC	AC-23 A / AC-23 B	-/40	-/63	-/63	-/63	-/63
Fuse protected short-circuit withstand (kA rms prospective)						
Prospective short-circuit current (kA rms)		50	50	50	25	15
Associated fuse rating (A)		40	63	80	100	125
Circuit breaker protected short-circuit withstand with any circuit breaker that ensures tripping in less than 0.3s[3]						
Rated short-time withstand current 0.3s I_{cw} (kA rms)		3.5	3.5	3.5	3.5	3.5
Short-circuit capacity as per IEC 60947-6-1						
Rated short-time withstand current 0.03 s. (kA)		5	5	5	5	-
Rated short-circuit making capacity I_{cm} (kA peak)		7.65	7.65	7.65	7.65	-
Short-circuit capacity as per IEC 60947-3 (without protection)						
Rated short-time withstand current 1 s. I_{cw} (kA rms)		2.5	2.5	2.5	2.5	2.5
Rated peak withstand current (kA peak)		12	12	12	12	12
Connection						
Maximum Cu cable cross-section (mm^2)		50	50	50	50	50
Tightening torque mini / maxi (Nm)		1.2/3	1.2/3	1.2/3	1.2/3	1.2/3
Switching time (Standard setting)						
I - 0 or II - 0 (ms)		500	500	500	500	500
I - II or II - I (ms)		1000	1000	1000	1000	1000
Duration of "electrical blackout" I - II (ms) minimum		500	500	500	500	500
Power supply						
Power supply 12 VDC min / max (VDC)		9/15	9/15	9/15	9/15	9/15
Power supply 24/48 VDC min / max (VDC)		17/62	17/62	17/62	17/62	17/62
Power supply 230 VAC min / max (VAC)		160/310	160/310	160/310	160/310	160/310
Control supply power demand						
Power supply 12 VDC inrush / nominal (VA)		200/40	200/40	200/40	200/40	200/40
Power supply 24/48 VDC inrush / nominal (VA)		200/40	200/40	200/40	200/40	200/40
Supply 230 VAC inrush / nominal (VA)		200/40	200/40	200/40	200/40	200/40
Mechanical characteristics						
Durability (number of operating cycles)		25 000	25 000	25 000	25 000	25 000
Weight ATyS S and ATyS d S 4 P (kg)		3	3	3	3	3

(1) Value for coordination with any circuit breaker that ensures tripping in less than 0.3s. For coordination with specific circuit-breaker references, higher short-circuit current values are available. Please consult us.

Terminals and connections

ATyS S DC version

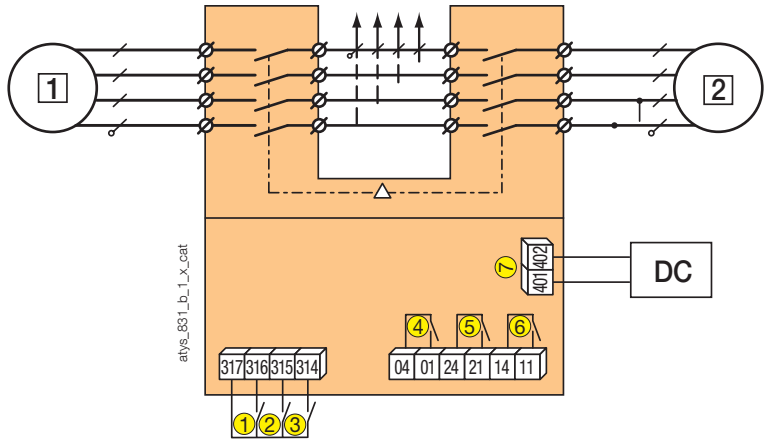

1 preferred source
2 alternate source
1: position 0 control
2: position I control
3: position II control
4: auxiliary contact, closed when the switch is in position 0
5: auxiliary contact, closed when the switch is in position II
6: auxiliary contact, closed when the switch is in position I
7: power supply 12 VDC (9-15 VDC) or 24 VDC / 48 VDC (17-62 VDC) depending on the version.

ATyS S: 230 VAC

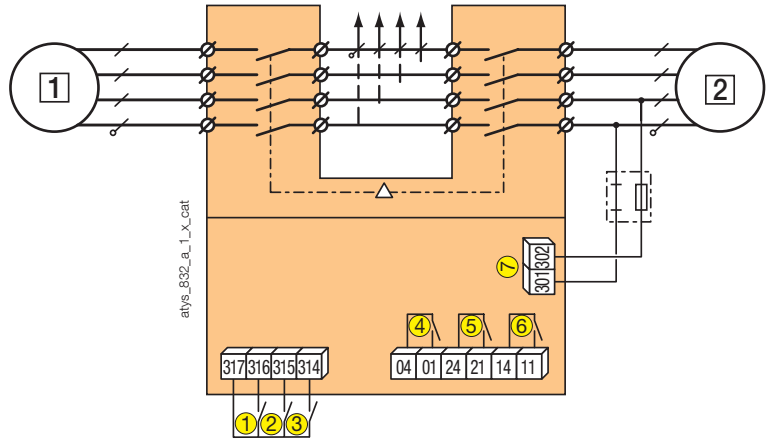

1 preferred source
2 alternate source
1: position 0 control
2: position I control
3: position II control
4: auxiliary contact, closed when the switch is in position 0
5: auxiliary contact, closed when the switch is in position II
6: auxiliary contact, closed when the switch is in position I
7: power supply kit: 230 VAC (160-310 VAC)

ATyS d S: 2 x 230 VAC

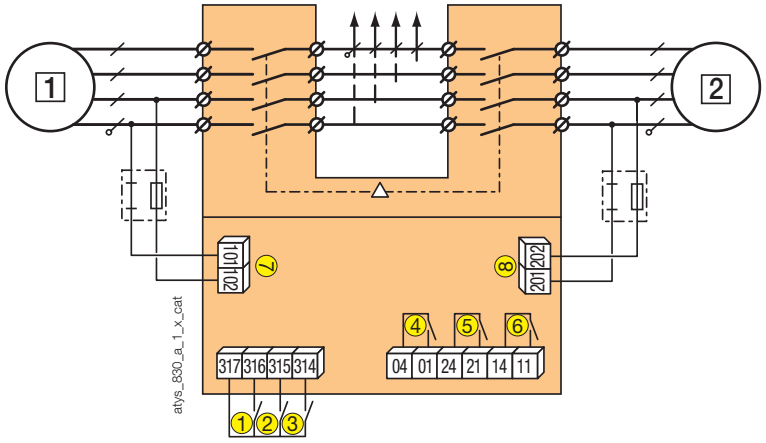

1 preferred source
2 alternate source
1: position 0 control
2: position I control
3: position II control
4: auxiliary contact, closed when the switch is in position 0
5: auxiliary contact, closed when the switch is in position II
6: auxiliary contact, closed when the switch is in position I
7: power supply kit I: 230 VAC (160-310 VAC)
8 : power supply kit II: 230 VAC (160-310 VAC)

Dimensions

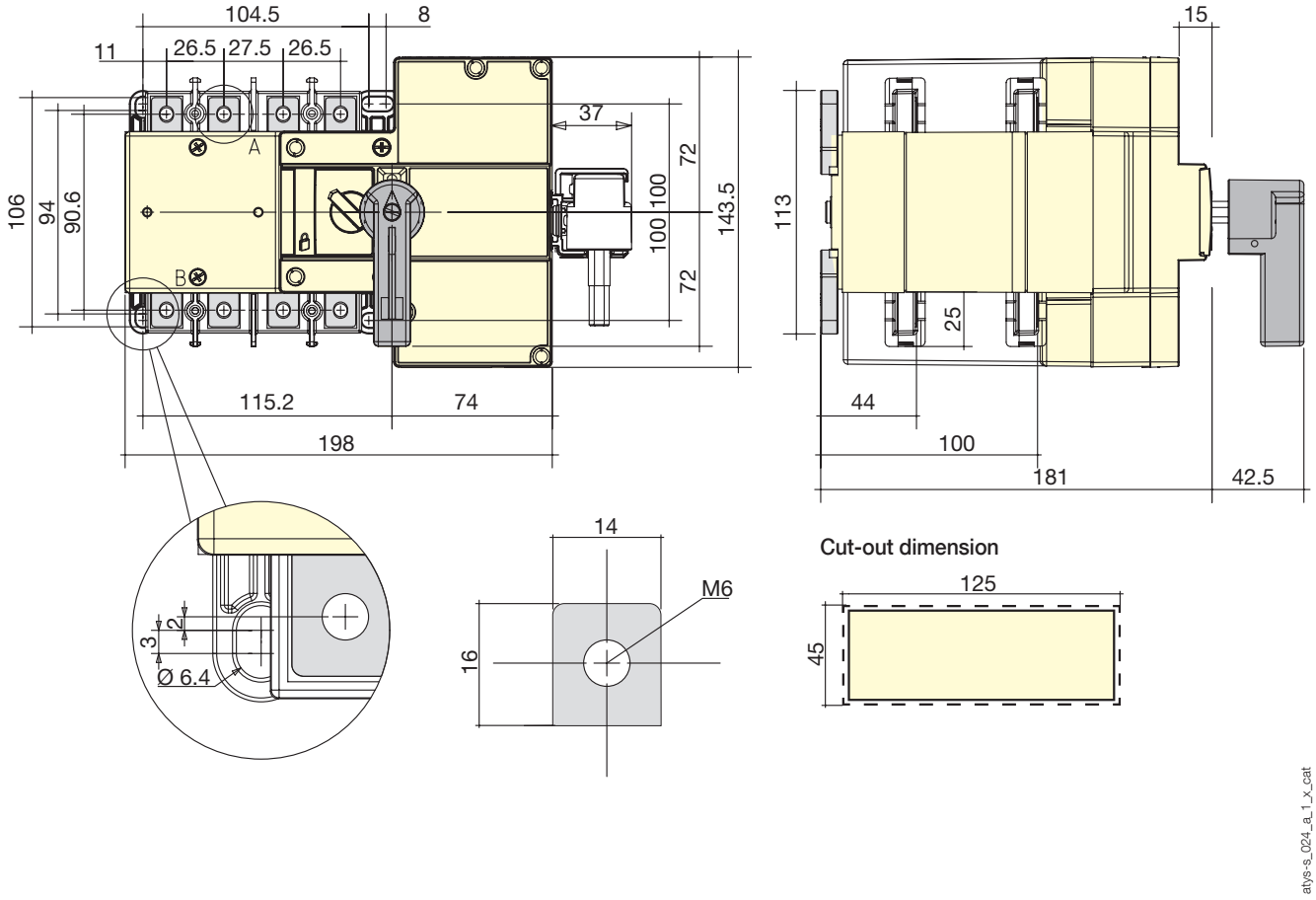

Connection terminal

