E11658

Wirable socket

SDOAH040MSSFKPG

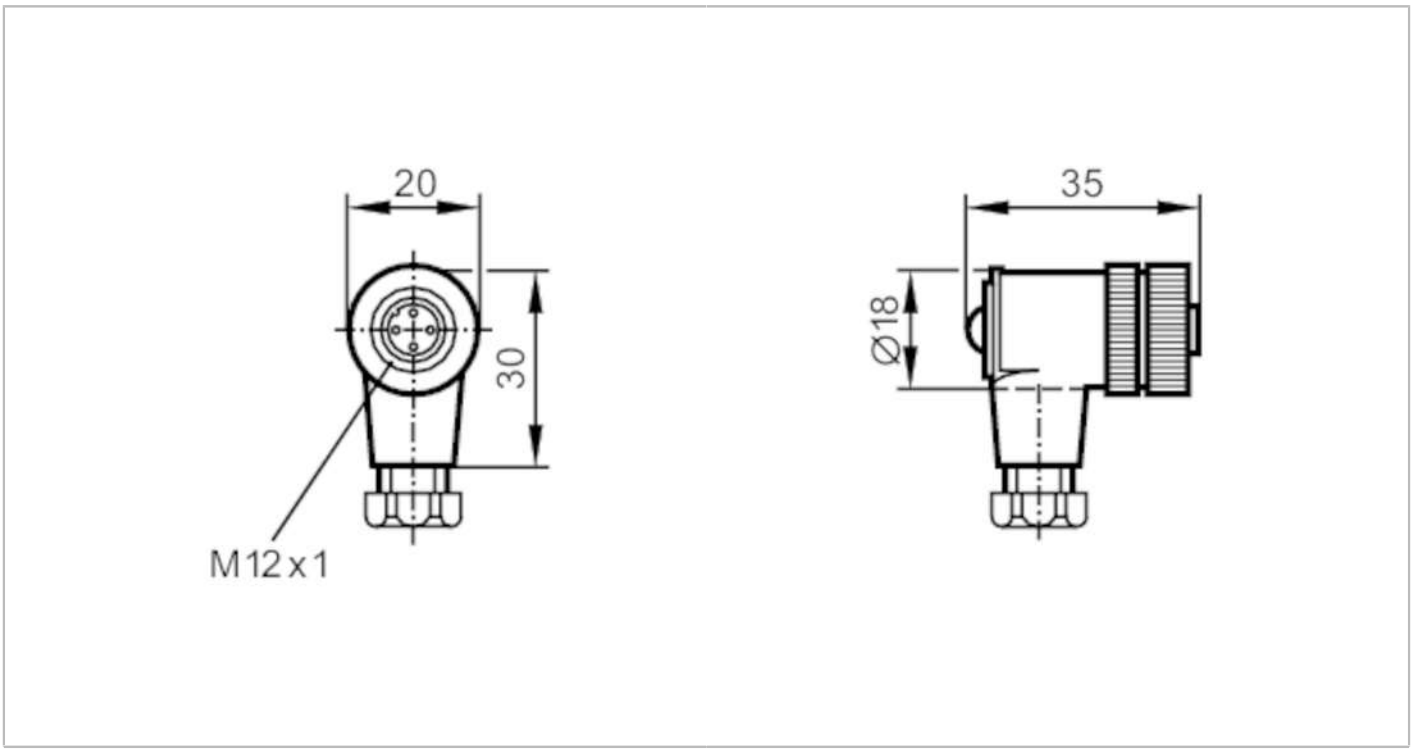

Application		
Special feature		Free from silicone; Gold-plated contacts
Free from silicone		yes
Electrical data		
Operating voltage	[V]	< 250 AC/DC
Max. current load total	[A]	4; (...40 °C)
Operating conditions		
Ambient temperature	[°C]	-25...100
Protection		IP 68
Mechanical data		
Weight	[g]	30.2
Dimensions	[mm]	35 x 20 x 30
Materials		PA
Moulded-body material		PA
Material nut		brass, nickel-plated
Remarks		
Pack quantity		1 pcs.
Electrical connection		
screw terminals: ...0.75 mm²; Cable sheath: Ø 6...8 mm		
Electrical connection - socket		
Connector: 1 x M12, angled; coding: A; Moulded body: PA; Locking: brass, nickel-plated; Contacts: gold-plated		

E11658

Wirable socket

SDOAH040MSSFKPG



Connection

