

Model Number

UB500-F54-E5-V15

Single head system

Features

- **Switch output**
- **5 output modes**
- **Program input**
- **Synchronization options**
- **Deactivation option**
- **Temperature compensation**

Curves

Characteristic response curve

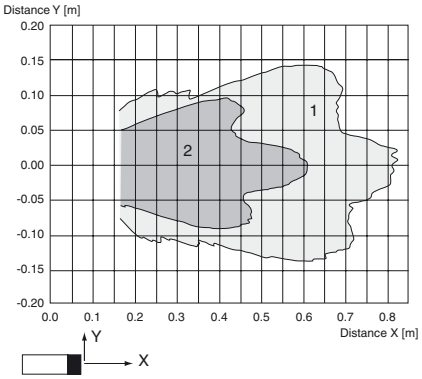

Curve 1: flat surface 100 mm x 100 mm
Curve 2: round bar, Ø 25 mm

Technical data

General specifications	
Sensing range	30 ... 500 mm
Adjustment range	50 ... 500 mm
Unusable area	0 ... 30 mm
Standard target plate	100 mm x 100 mm
Transducer frequency	approx. 380 kHz
Response delay	≤ 50 ms
Indicators/operating means	
LED green	permanently green: monitoring system green flashing: program function
LED yellow	indication of the switching state flashing: program function object detected
LED red	flashing: normal mode: error Program function: no object detected permanently: Program mode, object uncertain
Electrical specifications	
Operating voltage U_B	10 ... 30 V DC , ripple 10 $\%_{SS}$
No-load supply current I_0	≤ 55 mA
Input/output	
Synchronization	1 synchronous input 0 level: U_B...+1 V 1 level: +4 V...+U_B input impedance: > 12 KOhm synchronization pulse: 0.1 ... 8 ms
Synchronization frequency	
Common mode operation	≤ 100 Hz
Multiplex operation	≤ 100 / n Hz, n = number of sensors
Input	
Input type	1 program input, switching point A1: -U_B ... +1 V, switching point A2: +4 V ... +U_B input impedance: > 4.7 kΩ, program pulse: ≥ 1 s
Output	
Output type	1 switch output E5, pnp NO/NC
Rated operational current I_e	200 mA , short-circuit/overload protected
Voltage drop U_d	≤ 3 V
Repeat accuracy	≤ 1 % of full-scale value
Switching frequency f	max. 10 Hz
Range hysteresis H	≤ 1 % of the set operating distance
Temperature influence	± 1.5 % of full-scale value
Ambient conditions	
Ambient temperature	-25 ... 70 °C (248 ... 343 K)
Storage temperature	-40 ... 85 °C (233 ... 358 K)
Mechanical specifications	
Protection degree	IP65
Connection	connector V15 (M12 x 1), 5 pin
Material	
Housing	ABS
Transducer	epoxy resin/hollow glass sphere mixture; polyurethane foam
Mass	100 g
Compliance with standards and directives	
Standard conformity	
Standards	EN 60947-5-2:2007 IEC 60947-5-2:2007

Release date: 2009-10-27 11:20 Date of issue: 2009-10-27 104715_ENG.xml

Subject to reasonable modifications due to technical advances. Copyright Pepperl+Fuchs, Printed in Germany

Dimensions

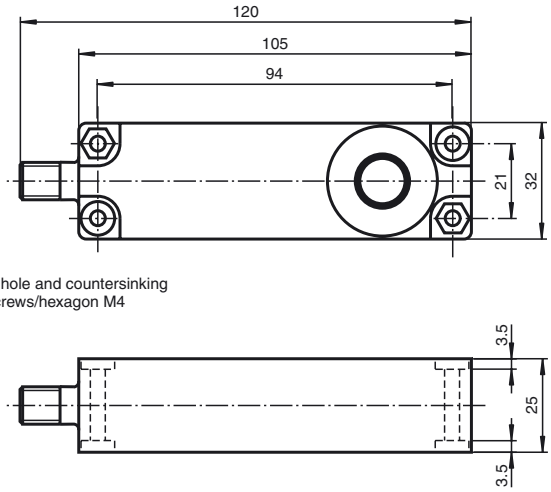

Bore hole and countersinking
for screws/hexagon M4

Electrical Connection

Standard symbol/Connections:
(version E5, pnp)

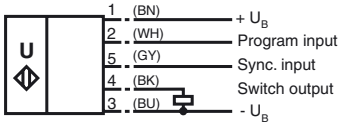

Wire colors in accordance with EN 60947-5-2.

Pinout

Connector V15



Synchronisation

The sensor features a synchronisation input for the suppression of mutual interference. If this input is not used, the sensor will operate using an internally generated clock rate. The synchronisation of multiple sensors can be realised as follows:

External synchronisation
The sensor can be synchronised by the external application of a square wave voltage. A synchronisation pulse at the synchronisation input starts a measuring cycle. The pulse must have a duration greater than 100 µs. The measuring cycle starts with the falling edge of a synchronisation pulse. A low level > 1 s or an open synchronisation input will result in the normal operation of the sensor. A high level at the synchronisation input disables the sensor.

Two operating modes are available

1. Multiple sensors can be controlled by the same synchronisation signal. The sensors are synchronised.
2. The synchronisation pulses are sent cyclically to individual sensors. The sensors operate in multiplex mode.

Internal synchronisation
The synchronisation connections of up to 5 sensors capable of internal synchronisation are connected to one another. When power is applied, these sensors will ope-

Additional Information

Programmable output modes

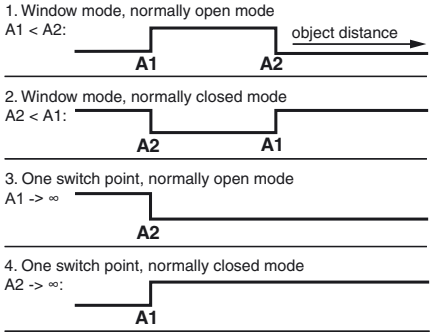

5. A1 -> ∞, A2 -> ∞: Object presence detection mode
Object detected: Switch output closed
No object detected: Switch output open

Accessories

UB-PROG2
Programming unit

V15-G-2M-PVC
Cable connector

V15-W-2M-PUR
Cable connector

Release date: 2009-10-27 11:20 Date of issue: 2009-10-27 104715_ENG.xml

Subject to reasonable modifications due to technical advances. Copyright Pepperl+Fuchs, Printed in Germany
Pepperl+Fuchs Group • Tel.: Germany +49 621 776-0 • USA +1 330 4253555 • Singapore +65 67799091 • Internet http://www.pepperl-fuchs.com

rate in multiplex mode. The response delay increases according to the number of sensors to be synchronised. Synchronisation cannot be performed during TEACH-IN and vice versa. The sensors must be operated in an unsynchronised manner to teach the switching point.

Note:

If the option for synchronisation is not used, the synchronisation input has to be connected to ground (0V) or the sensor has to be operated via a V1 cable connector (4-pin).

Adjusting of switching points

The ultrasonic sensor features a switch output with two teachable switching points. These are set by applying the supply voltage $-U_B$ or $+U_B$ to the TEACH-IN input. The supply voltage must be applied to the TEACH-IN input for at least 1 s. LEDs indicate whether the sensor has recognised the target during the TEACH-IN procedure. Switching point A1 is taught with $-U_B$, A2 with $+U_B$.

Five different output functions can be set

1. Window mode, normally-open function
2. Window mode, normally-closed function
3. One switching point, normally-open function
4. One switching point, normally-closed function
5. Detection of object presence

TEACH-IN window mode, normally-open function

- Set target to near switching point
- TEACH-IN switching point A1 with $-U_B$
- Set target to far switching point
- TEACH-IN switching point A2 with $+U_B$

TEACH-IN window mode, normally-closed function

- Set target to near switching point
- TEACH-IN switching point A2 with $+U_B$
- Set target to far switching point
- TEACH-IN switching point A1 with $-U_B$

TEACH-IN one switching point, normally-open function

- Set target to near switching point
- TEACH-IN switching point A2 with $+U_B$
- Cover sensor with hand or remove all objects from sensing range
- TEACH-IN switching point A1 with $-U_B$

TEACH-IN one switching point, normally-closed function

- Set target to near switching point
- TEACH-IN switching point A1 with $-U_B$
- Cover sensor with hand or remove all objects from sensing range
- TEACH-IN switching point A2 with $+U_B$

TEACH-IN detection of object presence

- Cover sensor with hand or remove all objects from sensing range
- TEACH-IN switching point A1 with $-U_B$
- TEACH-IN switching point A2 with $+U_B$

Default setting of switching points

A1 = unusable area

A2 = nominal sensing range

LED Displays

Displays in dependence on operating mode	Red LED	Yellow LED	Green LED
TEACH-IN switching point:			
Object detected	off	flashes	flashes
No object detected	flashes	off	flashes
Object uncertain (TEACH-IN invalid)	on	off	flashes
Normal operation	off	switching state	on
Fault	flashes	previous state	off

Release date: 2009-10-27 11:20 Date of issue: 2009-10-27 104715_ENG.xml

Subject to reasonable modifications due to technical advances. Copyright Pepperl+Fuchs, Printed in Germany