stay connected

MQ15-X-Power male receptacle front mount

wires PVC 4x2,5 0,15m

Art.No.: 7000-P8081-P820015
Weight: 0.036
Country of origin: DE
Model designation: MSWAQ3FV-P82_0.15

Link to Product

Illustration



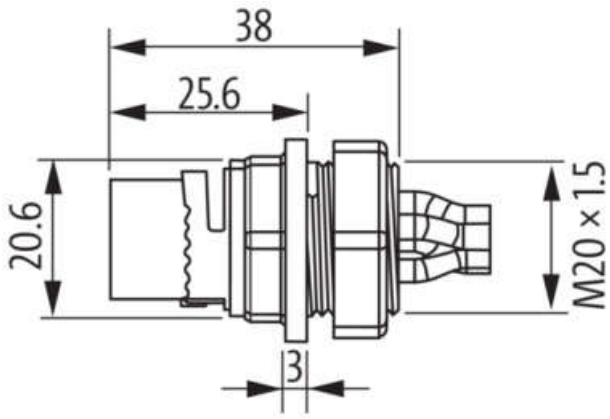

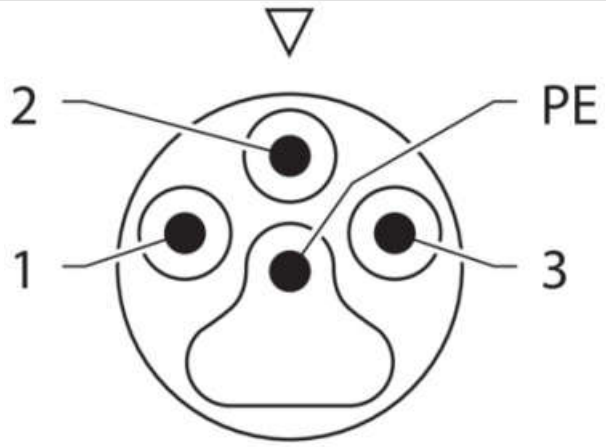

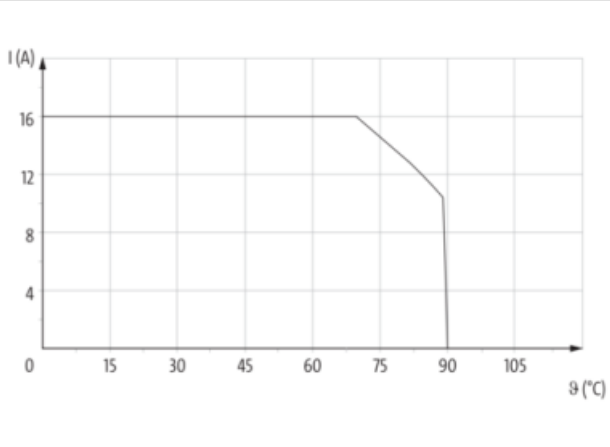

The information in this Product-PDF has been compiled with the utmost care.
Liability for the correctness completeness and topicality of the information is restricted to gross negligence. Version: 2025-07-17

stay connected

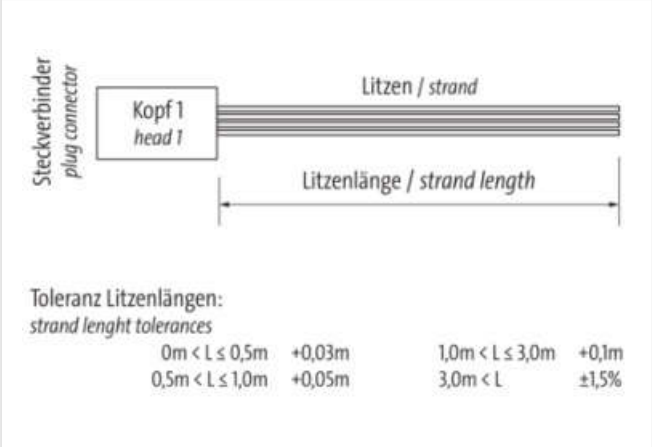

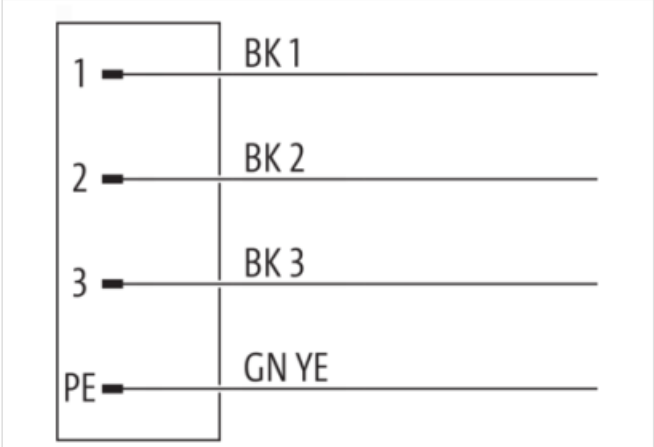

Product may differ from Image

LISTED
Power Cable Assembly
E492831

Side 1	
Family construction form	MQ15
No. of poles	4
Coding	Type 3
Mounting method	inserted, screwed
Material contact	Copper alloy
Coating contact	silver-plated

Commercial data	
URL Webshop	https://shop.murrelektronik.com/7000-P8081-P820015
GTIN	4048879626903
ECLASS-6.0	27279220
ECLASS-6.1	27279220
ECLASS-7.0	27440103
ECLASS-7.1	27440103
ECLASS-8.0	27440103
ECLASS-8.1	27440103
ECLASS-9.0	27440103
ECLASS-9.1	27440109
ECLASS-10.0.1	27440109
ECLASS-10.1	27440103
ECLASS-11.0	27440109
ECLASS-11.1	27440103
ECLASS-12.0	27440103
ECLASS-13.0	27440109
ECLASS-14.0	27440109
ETIM-5.0	EC002061
ETIM-6.0	EC002061
EAN	4048879626903

Electrical data | Supply	
Operating voltage AC max.	600 V
Current operating per contact max.	16 A

Diagnostics

The information in this Product-PDF has been compiled with the utmost care.
Liability for the correctness completeness and topicality of the information is restricted to gross negligence. Version: 2025-07-17

Status indication LED	no
Installation | Connection	
Mating cycles min.	500
Installation | Pin assignment	
Configuration	fully used
Device protection | Electrical	
Degree of protection (EN IEC 60529)	IP67
Additional condition protection degree	inserted, screwed
Pollution Degree	3
Rated surge voltage	6 kV
Material group (IEC 60664-1)	I
Mechanical data | Material data	
Material housing	Brass
Coating housing	nickel plated
Material contact carrier	PA
Mechanical data | Mounting data	
Looking techniques	bayonet-locking
Environmental characteristics | Climatic	
Operating temperature min.	-40 °C
Operating temperature max.	90 °C
Additional condition temperature range	depending on cable quality
Important installation notes	
Note on bending radius	**Attention:** Observe the permissible bending radii when laying cables, as the IP protection class can be endangered by excessive bending forces.
Note on strain relief	Protect the connectors by suitable measures from mechanical loads, e.g. by the usage of cable ties.
Conformity	
Product standard	DIN EN 61076-2-116
Temperature range | Cable	
Cable identification	P82
Wire arrangement	black 1, black 2, black 3, green-yellow
Material wire insulation	PVC
Amount wires	4
Outer diameter insulation	3.7 mm
Conductor crosssection (wire)	2.5 mm²
Material conductor wire	copper stranded wire, tinned
Conductor type (wire)	Strand class 5
Nominal voltage AC max.	600 V
Withstand voltage (wire - wire)	2.5 kV
Withstand voltage (wire - jacket)	2.5 kV
Min. operating temperature (static)	-40 °C
Max. operating temperature (fixed)	70 °C

The information in this Product-PDF has been compiled with the utmost care.
Liability for the correctness completeness and topicality of the information is restricted to gross negligence. Version: 2025-07-17