Bell Mounts - Type CFBMH - Type 2





Applications

- Gensets
- Engines
- Toolroom Machinery
- Special Equipment
- HVAC
- Pumps

The CFBMH range of mounts offer a high level of insulation - especially useful on Generators, Engines etc. with an operating frequency of around 25 Hz (1,500 RPM).

If you're looking for a Mount to provide high isolation at lower frequencies, please see our CFBMS range which are capable of providing isolation levels of circa. 80% even as low as 8Hz (500RPM).

Axial stresses are perfectly absorbed and side deflections are limited to guarantee good stability.

These Bell Mounts are designed with a fail-safe function making it an ideal solution for applications where safety is paramount.

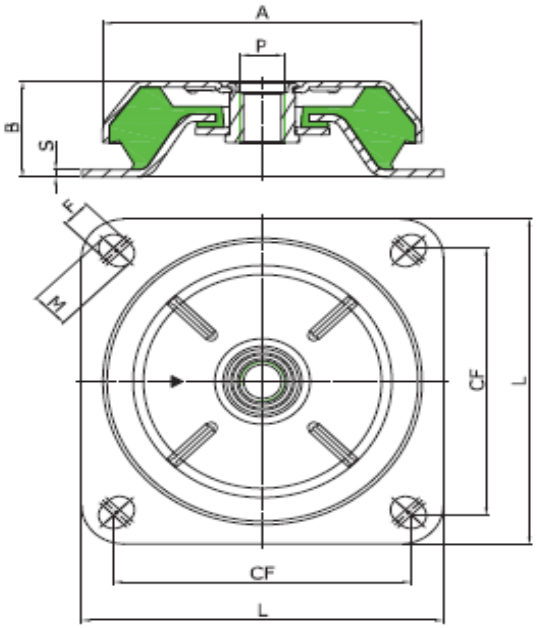

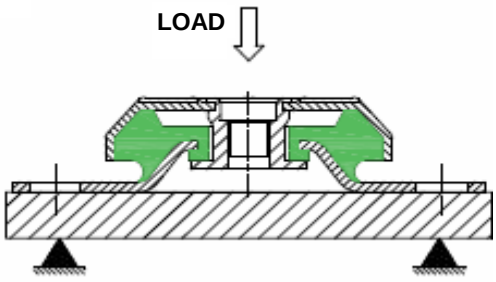

RS Ref:	Fibet Ref:	Hardness (IRHD)	A (mm)	B (mm)	P (mm)	FxM (mm)	CF (mm)	L (mm)	S (mm)	Average Stiffness (daN/mm)	Maximum Load (daN)	Maximum Deflection (mm)
201-2330	CFBMH1605820W	45	160	58	M20	14.5x18	140	170	5	120.0	840.0	7.0
201-2331	CFBMH1605820M	60	160	58	M20	14.5x18	140	170	5	220.0	1540.0	7.0
201-2332	CFBMH1806620W	45	180	66	M20	14.5	160	160	5	160.0	1120.0	7.0
201-2333	CFBMH1806620M	60	180	66	M20	14.5	160	160	5	320.0	2240.0	7.0