E12641

Connecting cable with socket

ADOGX050MSS0002H05

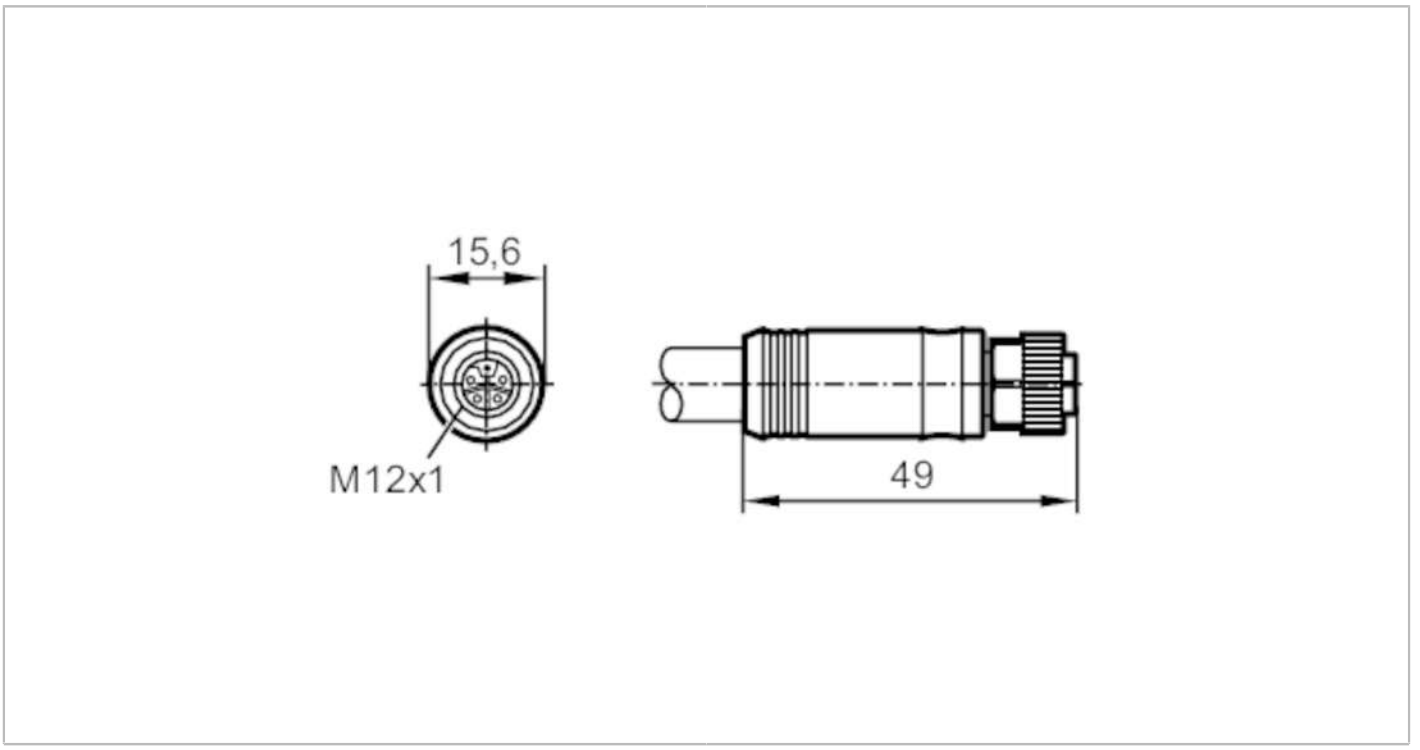

Application		
Special feature		Gold-plated contacts
Design		power cable, L-coded
Electrical data		
Operating voltage	[V]	63 DC
Max. current load total	[A]	16
Operating conditions		
Ambient temperature	[°C]	-40...90
Protection		IP 67
Mechanical data		
Weight	[g]	458.9
Dimensions	[mm]	49 x 15.6 x 15.6
Materials		PP
Moulded-body material		TPE
Material nut		brass, nickel-plated
Remarks		
Pack quantity		1 pcs.

E12641

Connecting cable with socket

ADOGX050MSS0002H05

Electrical connection

Cable: 2 m, PUR, black, Ø 11.3 mm; 5 x 2.5 mm²

Electrical connection - socket

Connector: 1 x M12, straight; coding: L; Moulded body: TPE; Locking: brass, nickel-plated; Contacts: gold-plated



Connection

