Drift punches

249 Standard drift punches

• Hexagonal shank, high-strength steel tip, hardened to 52-58 HRc.

	Ø A mm	B mm	l mm	L mm	g
249.2	1,9	8	25	105	30
249.3	2,9	8	30	120	35
249.4	3,9	10	35	135	65
249.5	4,9	10	40	150	75
249.6	5,9	12	45	165	120
249.8	7,9	12	50	180	140
249.10	9,9	16	55	195	170

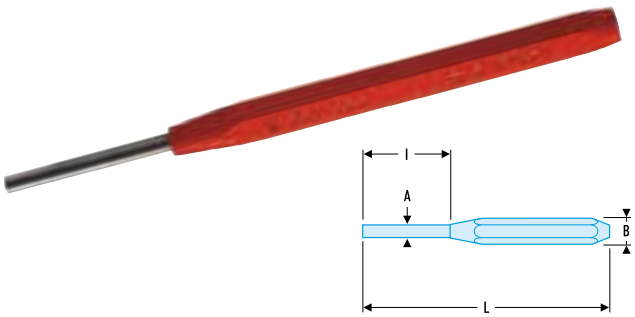

248 Long drift punches

• Hexagonal shank, high-strength steel tip, hardened to 52-58 HRc.

	Ø A mm	B mm	l mm	L mm	g
248.2	1,9	8	35	165	45
248.3	2,9	8	40	170	50
248.4	3,9	8	50	175	55
248.5	4,9	10	55	180	85
248.6	5,9	10	60	185	90
248.8	7,9	12	65	190	135
248.10	9,9	12	75	200	200

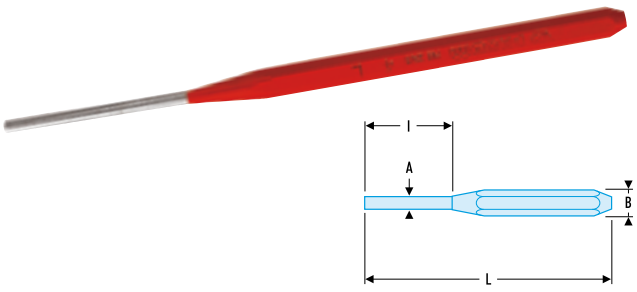

246 Drift punches for spring pins

• Shouldered tip accurately centres into split pins.

	Ø A mm	B mm	Ø C mm	l mm	L mm	g
246.2	1,9	8	1,0	25	105	30
246.3	2,9	8	1,8	30	120	35
246.4	3,9	10	2,4	35	135	45
246.5	4,9	10	3,0	40	150	75
246.6	5,9	12	3,6	45	165	120
246.8	7,9	12	5,1	50	180	140

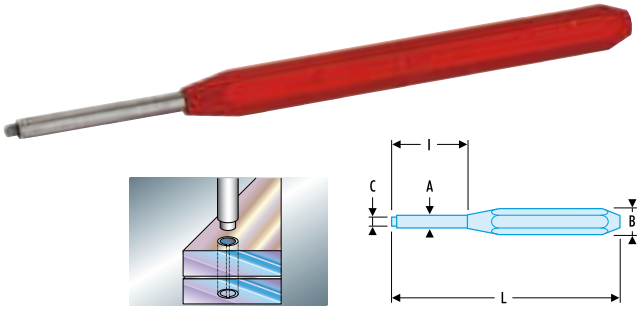

251A Precision sleeved drift punches

• The centre slides within a guide to prevent distortion, even in smaller sizes.
• Nickel shank, polished tip.

	Ø A mm	B mm	l mm	L mm	g
251A.1	0,9	5	12	70	5
251A.1,5	1,4	6	15	80	10
251A.2	1,9	6	18	83	10
251A.2,5	2,4	7	21	92	18
251A.3	2,9	7	24	95	20
251A.3,5	3,4	8	27	97	25
251A.4	3,9	8	30	100	30
251A.5	4,9	10	33	109	45
251A.6	5,9	12	36	112	65

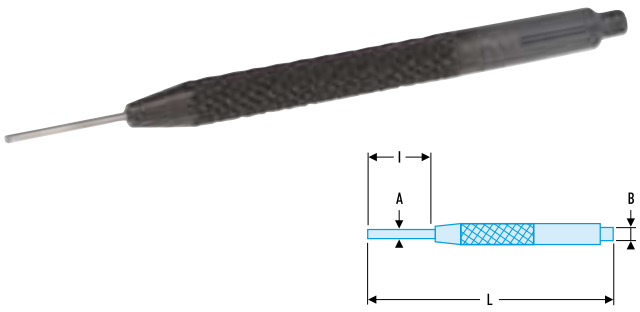

Nail sets

247 Standard nail sets

- Hexagonal shank, high-strength steel tip, hardened to 40-46 HRc.
- Paint-finish shank, polished tip.

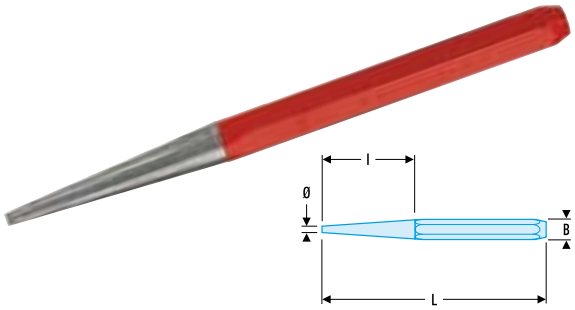

	Ø mm	B mm	L mm	l mm	ΔΔ g
247.2	1,6	8	105	40	35
247.3	2,0	8	120	45	40
247.4	2,8	10	135	50	70
247.5	4,0	10	150	55	80
247.6	4,8	12	160	60	120
247.8	7,0	12	180	65	140

Centre punches

256 Precision centre punches

▷ NF E 71-211.

- Forged in chrome-vanadium steel, hardened to 52-58 HRc.
- Knurled body.
- Chrome finish.

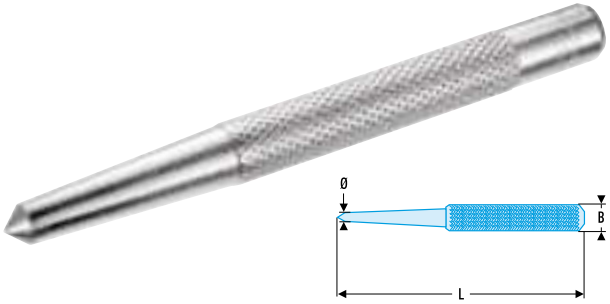

	Ø mm	B mm	L mm	ΔΔ g
256.2,5	2,5	7	100	25
256.4	4	8	105	35
256.6	6	10	115	60
256.8	8	12	130	100
256.10	10	14	130	135

Automatic centre punch

257

- Simply press the end to release spring impact.
- Impact strength adjusted by turning the knurl.
- Effective load 11 to 22 kg.
- Chromed body, greased tip.
- Length : 140 mm, shank Ø 16 mm, tip Ø 3.5 mm.

ΔΔ : 135 g.



	Description
257.07	Interchangeable tip

Sets

Punch sets

- JS in rack.
- JT in wallet.
- For 249.JT7 : wallet N.38A-7B.
- For 248.JT7 : wallet N.38A-7B.
- For 251A.JT9 : wallet N.38A-9C.
- For 247.265JT10 : wallet N.38A-10B.



	Set contents	L x l x H mm	Stand	ΔΔ kg
249.JS7	249.2-3-4-5-6-8-10	120x195x45	CKS.31A	0,868
249.JT7	249.2-3-4-5-6-8-10	230x120	-	0,755
248.JS6	248.2-3-4-5-6-8	120x190x45	CKS.29A	0,588
248.JT7	248.2-3-4-5-6-8-10	265 x 120	-	0,695
246.JS6	246.2-3-4-5-6-8	120x190x45	CKS.29A	0,593
246.JT6	246.2-3-4-5-6-8	200x165	-	0,545
251A.JS9	251A.1-1.5-2-2.5-3-3.5-4-5-6	120x115x45	CKS.32A	0,354
251A.JT9	251A.1-1.5-2-2.5-3-3.5-4-5-6	180 x 120	-	0,260
247.249JS12	247.2-3-4-5-6-8 / 249.2-3-4-5-6-8	120x180x47	CKS.33A	1,076
247.265JT10	247.3-4-5 / 256.4-6 / 249.3-4-5 / 263.20 / 265.18	180x120 / 240x60	-	1,155