IM002A

Inductive sensor

IME2040-FBOA/3D

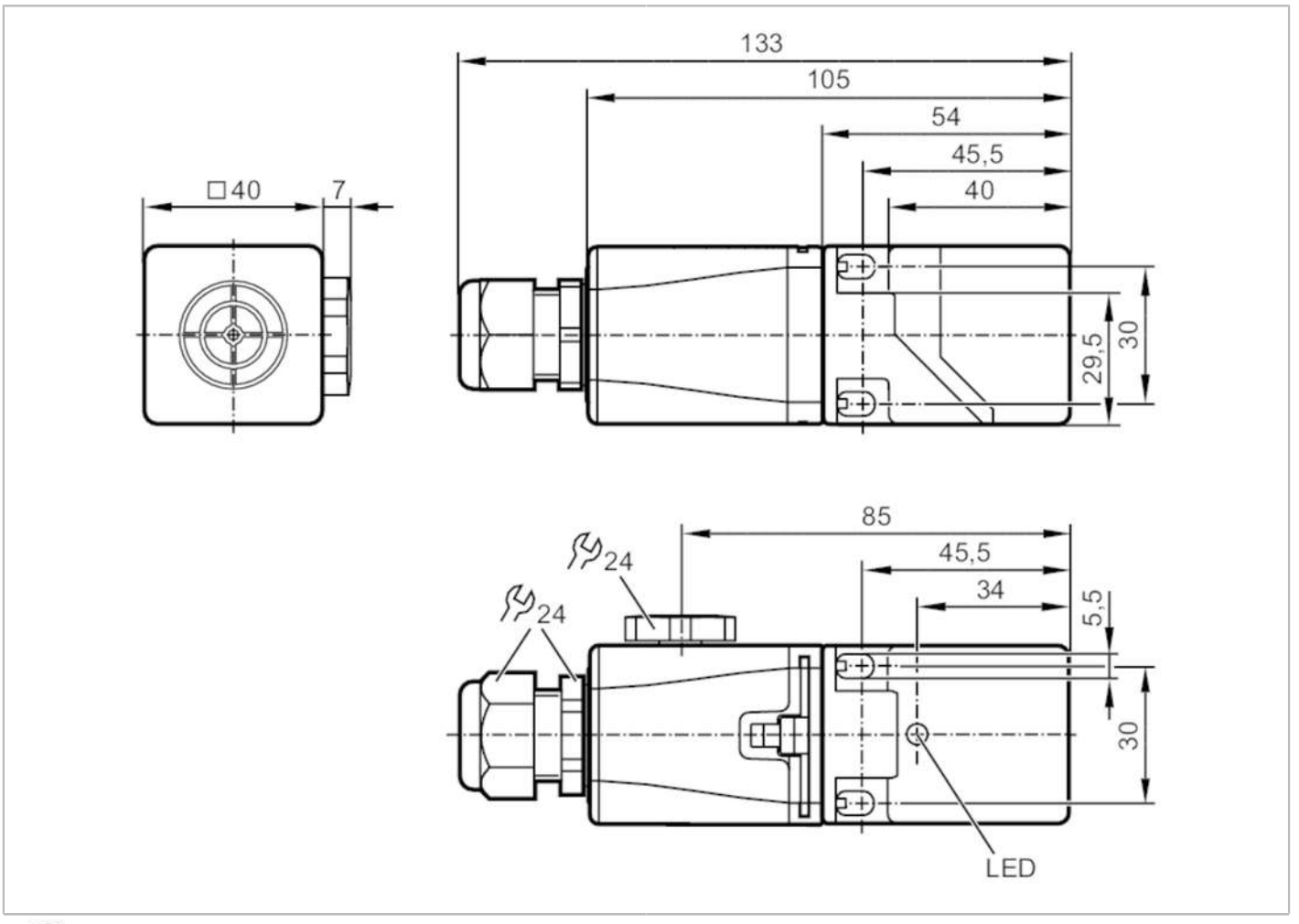

Product characteristics		
Output function		normally open / normally closed; (selectable)
Sensing range	[mm]	40
Housing		rectangular
Dimensions	[mm]	40 x 40 x 105
Electrical data		
Operating voltage	[V]	20...250 AC/DC
Protection class		II
Reverse polarity protection		no
Outputs		
Output function		normally open / normally closed; (selectable)
Max. voltage drop switching output DC	[V]	6
Max. voltage drop switching output AC	[V]	6.5
Minimum load current	[mA]	5
Max. leakage current	[mA]	2.5 (250 V AC) / 1.3 (130 V AC) / 0.8 (24 V DC)

IM002A

Inductive sensor

IME2040-FBOA/3D

Permanent current rating of switching output AC	[mA]	150
Permanent current rating of switching output DC	[mA]	100
Short-time current rating of switching output	[mA]	2200; (20 ms / 0,5 Hz)
Switching frequency AC	[Hz]	10
Switching frequency DC	[Hz]	10
Notes on switching frequency	[Hz]	only for resistive loads; 2 Hz for utilisation category AC-140
Short-circuit proof		no
Overload protection		no
Detection zone		
Sensing range	[mm]	40
Real sensing range Sr	[mm]	40 ± 10 %
Operating distance	[mm]	0...32.4
Accuracy / deviations		
Correction factor		steel: 1 / stainless steel: 0.7 / brass: 0.4 / aluminium: 0.3 / copper: 0.2
Hysteresis	[% of Sr]	1...20
Switch point drift	[% of Sr]	-10...10
Operating conditions		
Ambient temperature	[°C]	-20...60
Protection		IP 65; IP 67
Tests / approvals		
ATEX marking		II 3D Ex tc IIIC T95°C Dc X
EMC		EN 60947-5-2
MTTF	[years]	554
Mechanical data		
Weight	[g]	253
Housing		rectangular
Mounting		non-flush mountable
Dimensions	[mm]	40 x 40 x 105
Materials		PC; PA; stainless steel
Displays / operating elements		
Display		switching status: 1 x LED, yellow
Electrical connection		
Required protection		miniature fuse to IEC60127-2 sheet 1; ≤ 2 A; fast acting; Place the fuse outside the hazardous area.
Remarks		
Remarks		Recommendation: Check the safe functioning of the unit after a short circuit. 5 positions of the active zone possible
Pack quantity		1 pcs.

IM002A

Inductive sensor

IME2040-FBOA/3D

Electrical connection

terminals: 0.34...2.5 mm²; Cable sheath: Ø 5...9 mm

Connection

